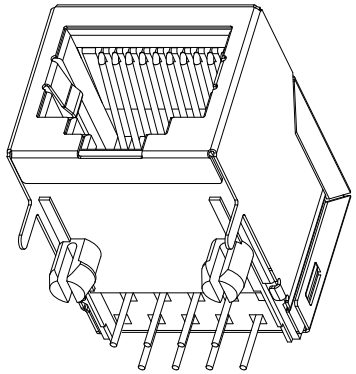

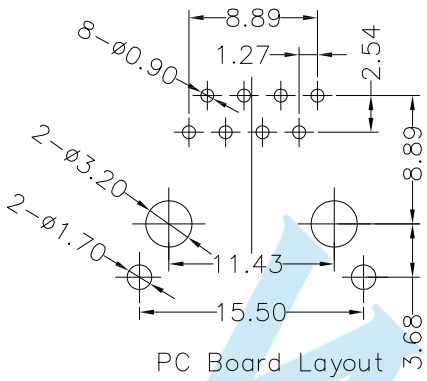

PC Board Layout

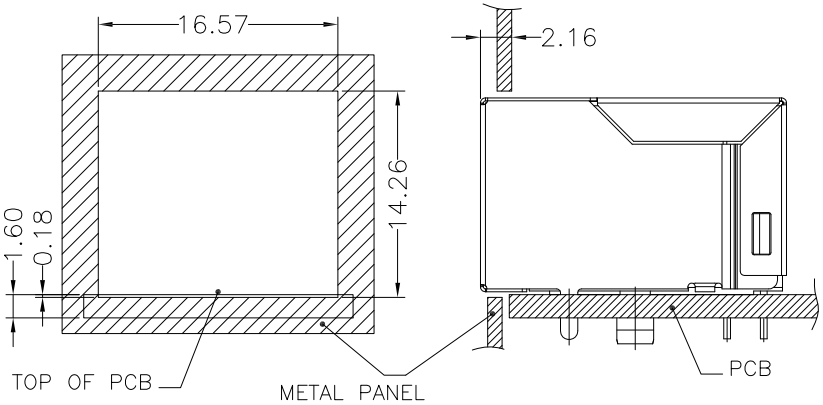

SUGGESTED PANEL CUTOUT DIM

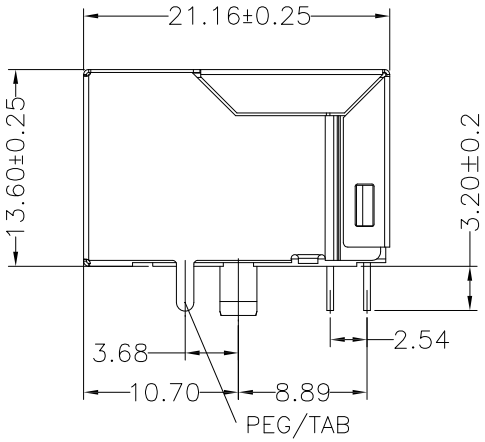

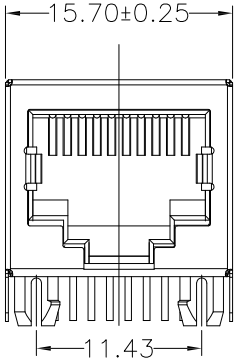

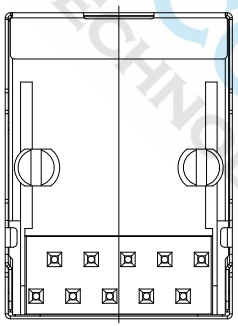

NOTES:

ELECTRICAL:

1. VOLTAGE RATING :125 VAC RMS.
2. CURRENT RATING : 1.5 AMP.
3. CONTACT RESISTANCE : 30 MILLIOHMSMAX
4. INSULATION RESISTANCE : 500 MEGOHMS MIN @ 500 NDC.
5. DIELECTRIC STRENGTH : 1000 VAC RMS 50Hz or 60Hz, 1MIN.

MECHANICAL:

1. HOUSING & INSERT MATERIAL : PBT UL94V-0.
2. CONTACT MATERIAL : DIAMETER0.45MM PHOSPHOR BRONZE GOLD PLATING OVER NICKEL.
3. SHIELD : 0.20~0.25MM THICKNESS BRASS WITH NI PLATED.
4. MATING/UNMATING FORCE : 2.2KG.F MAX.
5. RETENTION STRENGTH : 7.7KG.F MIN BETWEEN JACK AND PLUG.
6. OPERATING LIFE : 750 CYCLES MIN.

ENVIRONMENTAL:

1. STORAGE : -40℃ ~+85℃ REATIVE HUMIDITY<70%
2. OPERATION : -40℃ ~+85℃
3. IR Reflow Soldering Tempature:255 To 265 (5-10 Seconds)

Mates With Modular Plug conforming To FCC Part 68, Subpart F.

DIMENSIONS TOLERANCE METRIC	單位(UNITS)	MM	處理(FINISH)	SEE NOTE	審校(CH'K)	Calvin	圖名(NAME) RJ45 10P8C 1x1 90/D Tab Down FRONT PEG 3.68 H:13.6mm		WISCONN Technology Co.,Ltd					
Up to 5 ±0.2 Above 5~15 ±0.3 Above 15~30 ±0.4 Above 30~50 ±0.5 Angle ±0.3°	數量(QT'Y)	N/A	繪圖(DRAW)	Johnson	核准(APP'D)	Selena	料號(PART NUMBER)	WRJ5-108-11-xxRAAA3	Tel:02-2790-1979 Fax:02-2790-1569					
	材料(MT'L)	SEE NOTE	設計(DE'N)	Mike	日期(DATE)	JUL.24.2017	圖號(DRAW NUMBER)	C006	比例(SCALE)	1/1	圖紙(SIZE)	A4	頁次(SHEET) 1	版次(REV.) A
							圖檔(FILE NAME .DWG)							