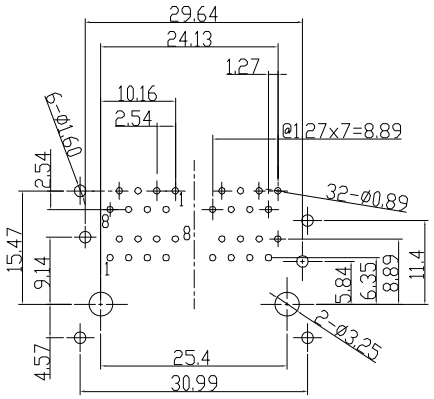

PC BOARD LAYOUT
THICKNESS=1.6MM

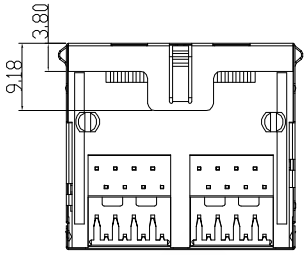

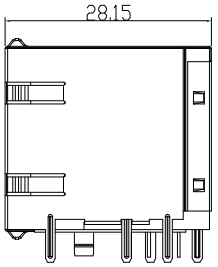

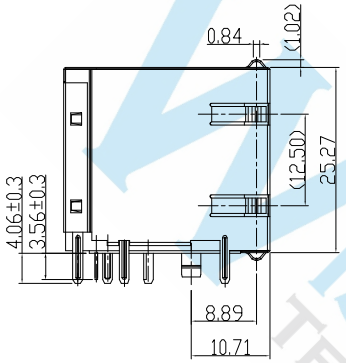

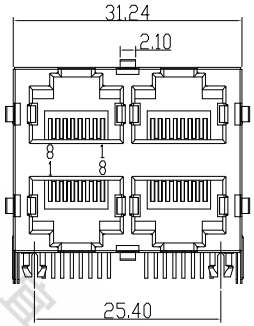

机构特性：
1.塑壳材质：(见料号表格)，UL94V-0；
2.扁针材质：磷青铜，厚度0.35mm；
3.扁针电镀：扁针电镀：接触区镀金
（见料号表格），镍底，剥头电镀雾锡；
4.铁壳材质:黄铜，厚度0.20mm，镀镍；
5.可靠性：最少750次插拔.
6.插入/拔出力： 30N Max. 5
7.配合强度： 50N 60S±5S. 5

环境特性：
1.储存温度：-40℃～+85℃相对湿度<80% 5
2.工作温度：-40℃～+85℃

电气特性：
1.额定电压：150 VAC RMS
2.额定电流：1.5 AMP
3.接触电阻：20 mΩ MAX. 5
4.绝缘电阻：1000 MΩ MIN.@500 VDC
5.耐压强度：CONTACT TO CONTACT：1000 V DC OR AC PEAK；
CONTACT TO SCREEN AND TEST PANEL：1500 V DC OR AC PEAK
@ 0.5mA 50 Hz 或 60 Hz 一分钟

NOTES:

ELECTRICAL:

1.	VOLTAGE RATING	: 150 VAC RMS.
2.	CURRENT RATING	: 1.5 AMP.
3.	CONTACT RESISTANCE	: 20 MILLIOHMS MAX. 5
4.	INSULATION RESISTANCE	: 1000 MEGOHMS MIN @ 500 VDC.
5.	DIELECTRIC STRENGTH	: CONTACT TO CONTACT:1000 V DC OR AC PEAK CONTACT TO SCREEN AND TEST PANEL:1500 V DC OR AC PEAK @ 0.5mA 50 Hz OR 60 Hz A MINUTE

MECHANICAL:

1.	HOUSING MATERIAL	: SEE TABLE UL94V-0.
2.	INSERT MATERIAL	: PBT UL94V-0. COLOR BLACK
3.	CONTACT MATERIAL	: PHOSPHOR BRONZE T=0.35mm.
4.	SHIELD	: BRASS T=0.2mm PLATED NICKEL FOR ALL.
5.	PLATING	: GOLD PLATING OVER NICKEL.
6.	OPERATING LIFE	: 750 CYCLES MIN
7.	MATING/UNMATING FORCE	: 30N Max. 5
8.	RETENTION STRENGTH:	: 50N FOR 60S± 5S. 5

ENVIRONMENTAL:

1. STORAGE : -40° C TO +85° C RELATIVE HUMIDITY<80%. 5
2. OPERATION: -40° C TO +85° C.

MATES WITH MODULAR PLUG CONFORMING TO IEC-60603 & TIA-1096.

WISCONN TECHNOLOGY 威宙科技

DIMENSIONS TOLERANCE METRIC Up to 5 ±0.2 Above 5~15 ±0.3 Above 15~30 ±0.4 Above 30~50 ±0.5 Angle ±0.3°	單位(UNITS)	MM	處理(FINISH)	SEE NOTE	審校(CH'K)	Calvin	圖名(NAME) RJ45 2x2port With Shield PBT BLACK 6u"		WISCONN Technology Co.,Ltd				
	數量(QT'Y)	N/A	繪圖(DRAW)	Johnson	核准(APP'D)	Selena	料號(PART NUMBER)	WRJ588-2X206PBDR	Tel:02-2790-1979 Fax:02-2790-1569				
	材料(MT'L)	SEE NOTE	設計(DE'N)	Mike	日期(DATE)	JUN.28.2016	圖號(DRAW NUMBER) 圖檔(FILE NAME .DWG)	T028	比例(SCALE) 1/1	圖紙(SIZE) A4	頁次(SHEET) 1	版次(REV.) A	