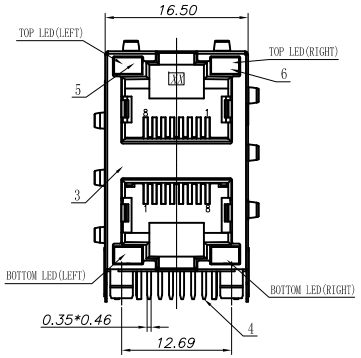

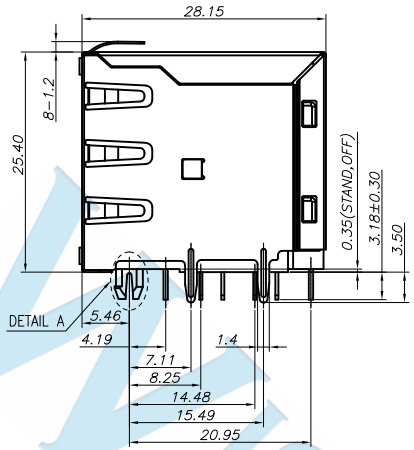

MATERIALS:
1. Housing:PA46 BLACK UL94V-0. (RoHS)
2. Insert: PBT BLACK UL94V-0. (RoHS)
3. Shielding:Copper Alloy with Nickel Plated. (RoHS)
4. Contact:T0.35mm Phosphor Bronze gold Plating Over Nickel. (RoHS)
5. Led:YELLOW(RoHS)
6. Led:GREEN(RoHS)
※MATES WITH MODULAR PLUG CONFORMING TO FCC PART 68, SUBPART F.

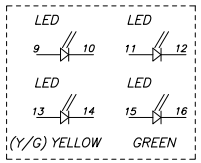

LED PIN DEFINE

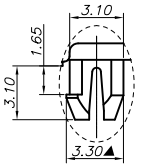

DETAIL A(2:1)

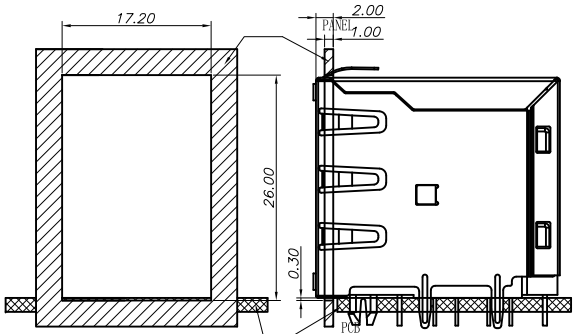

Recommend panel cutout

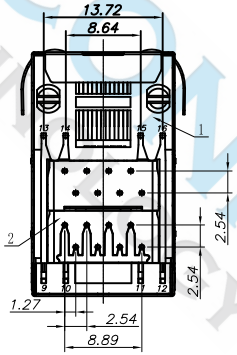

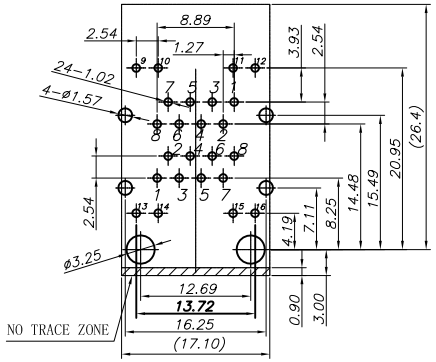

RECOMMENDED P.C.B LAYOUT TOP VIEW
(COMPONENT SIDE TOLERANCE±0.05 THICKNESS=1.6mm)

DIMENSIONS TOLERANCE METRIC	UNITS	MM	FINISH	SEE NOTE	CH'K	Calvin	DRAW NAME RJ45 2X1 EMI LED(YG) TYPE		WISCONN Technology Co., Ltd
Up to 5 ±0.2 Above 5~15 ±0.3 Above 15~30 ±0.4 Above 30~50 ±0.5 Angle ±0.3°	QT'Y	N/A	DRAW	Johnson	APP'D	Selena	PART NUMBER	WRJ588S-2X1FPBDR-YG	Tel:+886-2-2790-1979 Fax:+886-2-2790-1569
	MT'L	SEE NOTE	DE'N	Mike	DATE	August . 2 . 2021	DRAW NUMBER	C011	SCALE 1/1 SIZE A4 SHEET 1 REV. A
							FILE NAME .DWG		