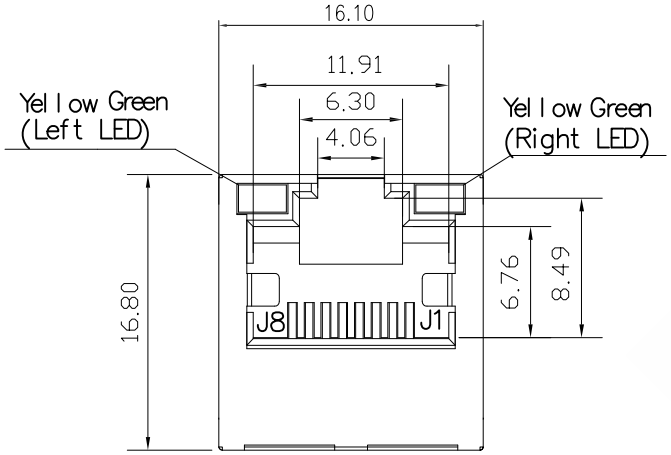

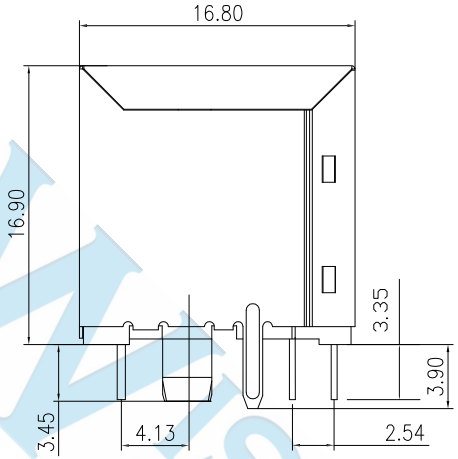

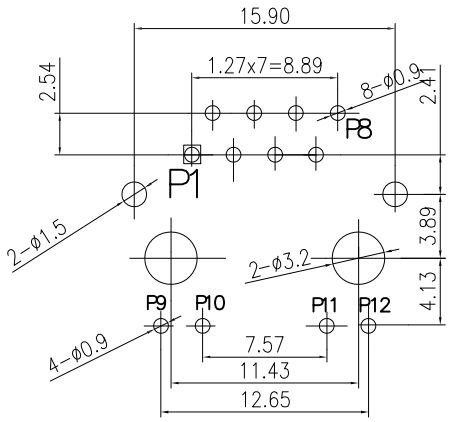

P.C.B RECOMMENDED HOLE LAYOUT SEEEN FROM COMPONENT SIDE.
ALL CENTERLINE DIMENSIONS ARE BASIC

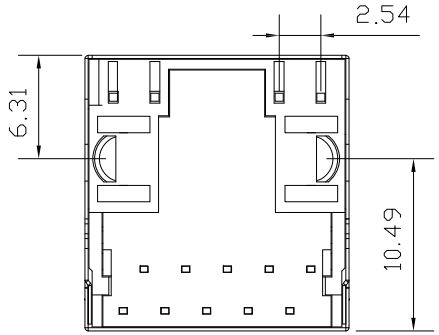

1. Connector Material:
   Housing: Thermoplastic UL94 V-0
   Contact/Shield: Cooper alloy
   Shield Plating: Nickel
   Contact Plating: Selective gold 6u"; 15u"; 30u"; 50u"Min
2. Tolerances comply with F.C.C dimension requirements
3. Durability: 800 mating Min
4. Meets or Exceeds IEEE802.3af standards including
   350uH Min OCL@100KHz 100mV 8mA DC

LED Specification

Standard LED Color	LED Wavelength	Forward (V MAX)	Typical (V TYP)	Luminous Intensity
Green	560-580 nm	2.5V	2.1-2.2V	9-25 MCD
Yellow	580-610 nm	2.5V	2.1-2.2V	9-30 MCD

1. LED intensity/wavelength measured with Photo Research PR-650 Colormeter
2. With a forward current of 20 mA, Absolute Maximum Ratings (Ta=25℃)

WISCONN TECHNOLOGY

DIMENSIONS TOLERANCE METRIC														
Up to 5 ±0.2 Above 5~15 ±0.3 Above 15~30 ±0.4 Above 30~50 ±0.5 Angle ±0.3°	UNITS	MM	FINISH	SEE NOTE	CH'K	Calvin	DRAW NAME RJ45 1X1 10-100 180D LED(GYGY) H16.9MM		WISCONN Technology Co.,Ltd					
	QT'Y	N/A	DRAW	Johnson	APP'D	Selena	PART NUMBER	WRJ-1104D2002-6	Tel:+886-2-2790-1979 Fax:+886-2-2790-1569					
	MT'L	SEE NOTE	DE'N	Mike	DATE	June . 11 . 2020	DRAW NUMBER	C006	SCALE 1/1	SIZE A4	SHEET 1	REV. A		
							FILE NAME .DWG							

1. Electrical Specifications: @25℃

1.1. Isolation Voltage: 1500V/AC(Input to Output)

1.2. OCL: 350uH Minimum @100KHz 100mV 8mA DC

1.3. Instertion Loss: -1.2dB Maximum @100KHz-100MHz

1.4. Return Loss: -18dB Minimum @1MHz-30MHz

-14dB Minimum @30MHz-60MHz

-12dB Minimum @60MHz-80MHz

-10dB Minimum @80MHz-100MHz

1.5. Common Mode Rejection: -30dB Minimum @1MHz-100MHz

1.6. Cross Talk: -30dB Minimum @1MHz-100MHz

2. Operating and Storage Temperature:

2.1. Operating Temperature: -40℃ to +85℃

2.2 . Storage Temperature: -40℃ to +85℃

3. Schematics:

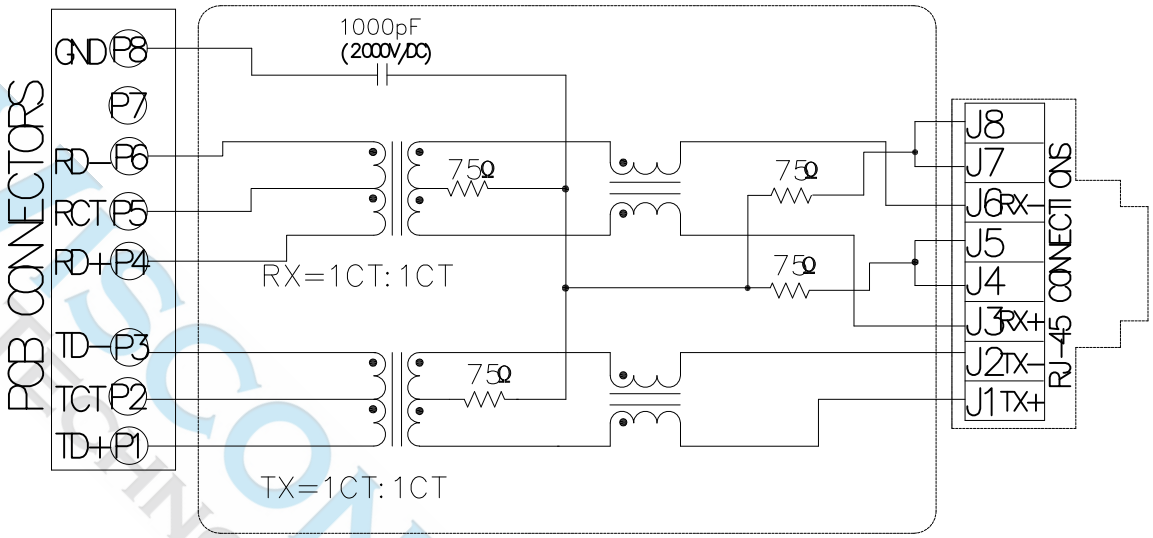

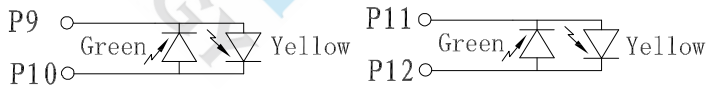

DIMENSIONS TOLERANCE METRIC																
Up to 5 ±0.2 Above 5~15 ±0.3 Above 15~30 ±0.4 Above 30~50 ±0.5 Angle ±0.3°	UNITS	MM	FINISH	SEE NOTE	CH'K	Calvin	DRAW NAME RJ45 1X1 10-100 180D LED(GYGY) H16.9MM		WISCONN Technology Co.,Ltd							
	QT'Y	N/A	DRAW	Johnson	APP'D	Selena	PART NUMBER	WRJ-1104D2002-6	Tel:+886-2-2790-1979 Fax:+886-2-2790-1569							
	MT'L	SEE NOTE	DE'N	Mike	DATE	June . 11 . 2020	DRAW NUMBER	C006	SCALE	1/1	SIZE	A4	SHEET	2	REV.	A
							FILE NAME .DWG									