1. Electrical Specifications:@25℃

1.1. Isolation Voltage: 1500V/AC(Input to Output)

1.2. OCL:350uH Minimum @100KHz 100mV 8mA DC

1.3. Instertion Loss: -1.2dB Maximum @100KHz-100MHz

1.4. Return Loss: -18dB Minimum @1MHz-30MHz
-14dB Minimum @30MHz-60MHz
-12dB Minimum @60MHz-80MHz

1.5. Common Mode Rejection: -30dB Minimum @1MHz-100MHz

1.6. Cross Talk: -30dB Minimum @1MHz-100MHz

1.7. POE+ rating: 15W ,600mA 48V(For POE+ Products Only)

2. Operating and Storage Temperature:

2.1. Operating Temperature:-40℃ to +85℃

2.1. Storage Temperature:-40℃ to +85℃

3. Schematics:

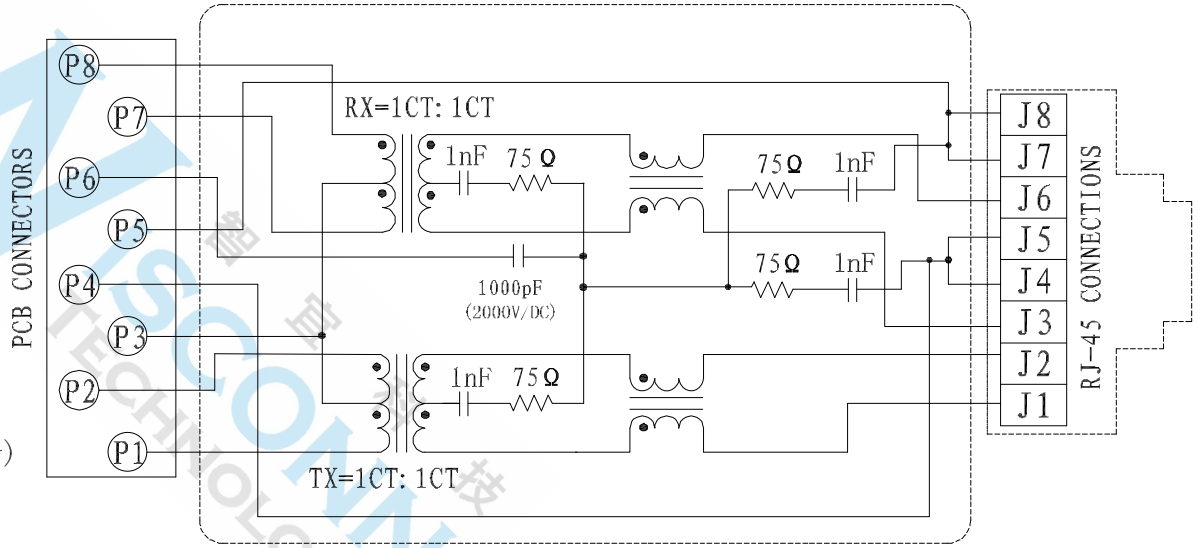

DIMENSIONS TOLERANCE METRIC													
Up to 5 ±0.2 Above 5~15 ±0.3 Above 15~30 ±0.4 Above 30~50 ±0.5 Angle ±0.3°	單位(UNITS)	MM	處理(FINISH)	SEE NOTE	審校(CH'K)	Calvin	圖名(NAME) RJ45 1x1 POE+ With 10/100 Tab Down L:21.35mm	WISCONN Technology Co.,Ltd					
	數量(QT'Y)	N/A	繪圖(DRAW)	Johnson	核准(APP'D)	Selena	料號(PART NUMBER) WRJ-1104A10181T	Tel:02-2790-1979 Fax:02-2790-1569					
	材料(MT'L)	SEE NOTE	設計(DE'N)	Mike	日期(DATE)	APR.21.2017	圖號(DRAW NUMBER) C006 圖檔(FILE NAME .DWG)	比例(SCALE) 1/1	圖紙(SIZE) A4	頁次(SHEET) 1	版次(REV.) A		

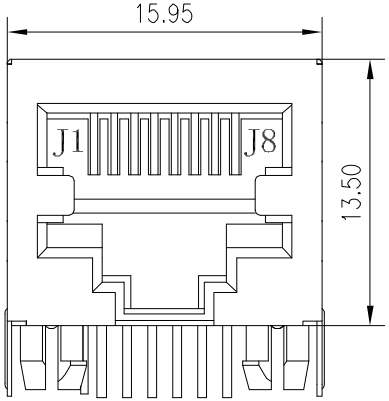

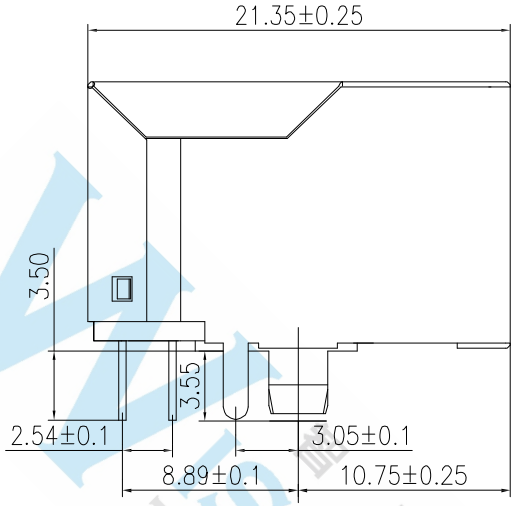

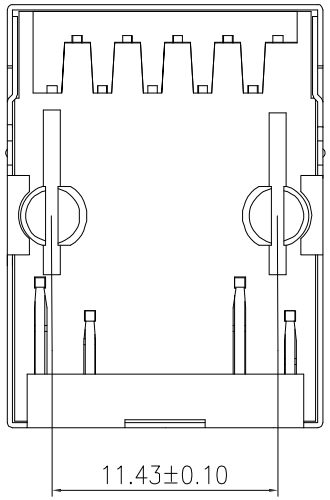

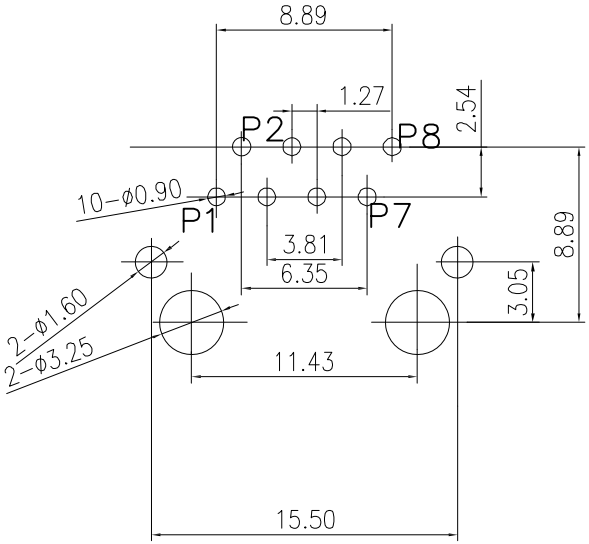

P.C.B RECOMMENDED HOLE LAYOUT SEEEN FROM COMPONENT SIDE.

ALL CENTERLINE DIMENSIONS ARE BASIC

4.1. Connector Material:
Housing:Thermoplastic UL94 V-0
Contact/Shield:Cooper alloy
Shield Plating:Nickel
Contact Plating:Selective gold 6u"; 15u"; 30u"; 50u"Min

4.2. Tolerances comply with F.C.C dimension requirements

4.3. Durability:800 mating Min

4.4. Meets or Exceeds IEEE802.3at standards including 350uH Min OCL @100KHz 100mV 8mA DC

WISCONN TECHNOLOGY 威宜科技

DIMENSIONS TOLERANCE METRIC															
Up to 5 ±0.2	單位(UNITS)	MM	處理(FINISH)	SEE NOTE	審校(CH'K)	Calvin	圖名(NAME) RJ45 1x1 POE+ With 10/100 Tab Down L:21.35mm		WISCONN Technology Co.,Ltd						
Above 5~15 ±0.3	數量(QT'Y)	N/A	繪圖(DRAW)	Johnson	核准(APP'D)	Selena	料號(PART NUMBER)	WRJ-1104A10181T	Tel:02-2790-1979 Fax:02-2790-1569						
Above 15~30 ±0.4															
Above 30~50 ±0.5	材料(MT'L)	SEE NOTE	設計(DE'N)	Mike	日期(DATE)	APR.21.2017	圖號(DRAW NUMBER)	C006	比例(SCALE)	1/1	圖紙(SIZE)	A4	頁次(SHEET)	1	版次(REV.) A
Angle ±0.3°							圖檔(FILE NAME .DWG)								