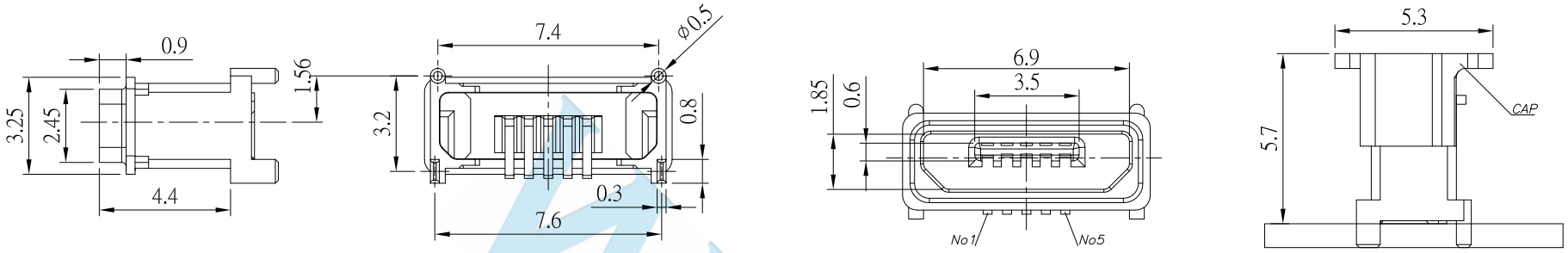

ASSEMBLY WITH CAP

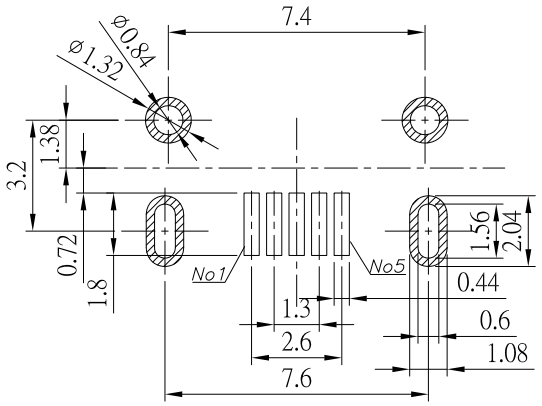

P.C.B LAYOUT MOUNTING PATTERN

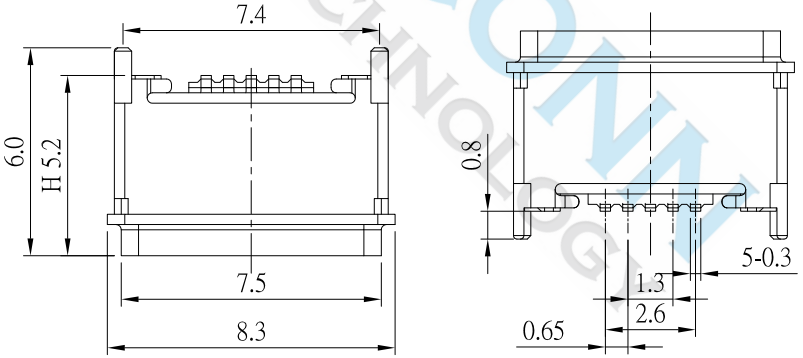

NOTES:

MATERIAL:

1.1 HOUSING: HIGH-TEMP

1.2 CONTACT: COPPER ALLOY

1.3 SHELL: SUS

FINISH:

2.1 CONTACT: PLATED GOLD IN MATING AREA ;
GOLD PLATED ON SOLDER BALLS ;
NICKEL UNDER PLATED OVERALL

2.2 SHELL: NICKEL UNDER PLATED SURFACE LAYER

3.SPECIFICATION:

3.1 RATING: 1.8A(PIN1&5) , 0.5A(PIN2&3&4)

3.2 DIELECTRIC WITHSSTANDING VOLTAGE: 100 VAC

3.3 CONTACT RESISTANCE: 30 mΩ MAX.

3.4 INSULATION RESISTANCE: 1000 MΩ MIN.

DIMENSIONS TOLERANCE METRIC Up to 5 ±0.2 Above 5~15 ±0.3 Above 15~30 ±0.4 Above 30~50 ±0.5 Angle ±0.3°	UNITS	MM	FINISH	SEE NOTE	CH'K	Calvin	DRAW NAME MICRO USB2.0 B TYPE IPX7 Vertical SMT H:5.2mm		WISCONN Technology Co.,Ltd Tel:+886-2-2790-1979 Fax:+886-2-2790-1569					
	QT'Y	N/A	DRAW	Johnson	APP'D	Selena	PART NUMBER	WMRU2-5-FWP7V63D18P7						
	MT'L	SEE NOTE	DE'N	Mike	DATE	MAR.21.2018	DRAW NUMBER	T002	SCALE 1/1	SIZE A4	SHEET 1	REV. A		
							FILE NAME .DWG							

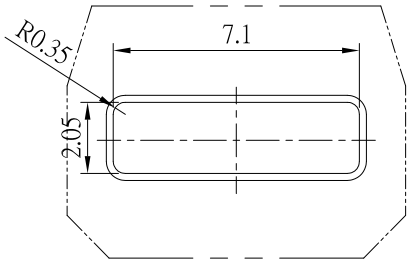

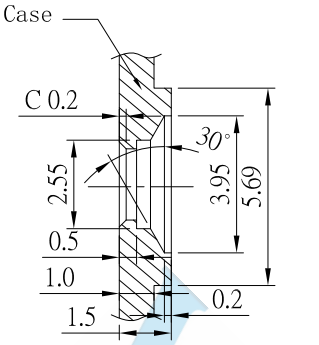

RECOMMENDED OPEN DIMENISION OF CASE

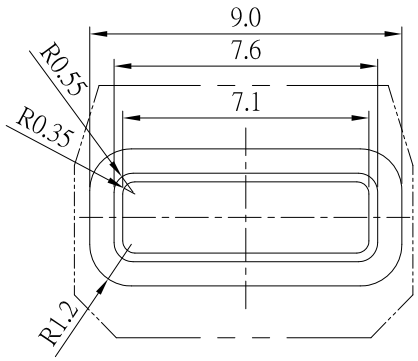

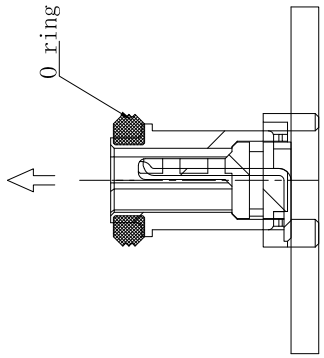

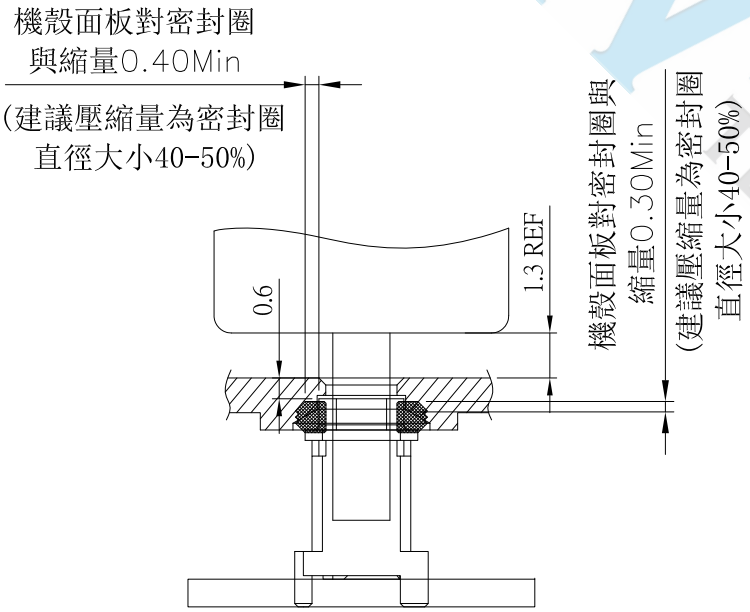

COMPRESSION RATIO TO BE 40%-50%

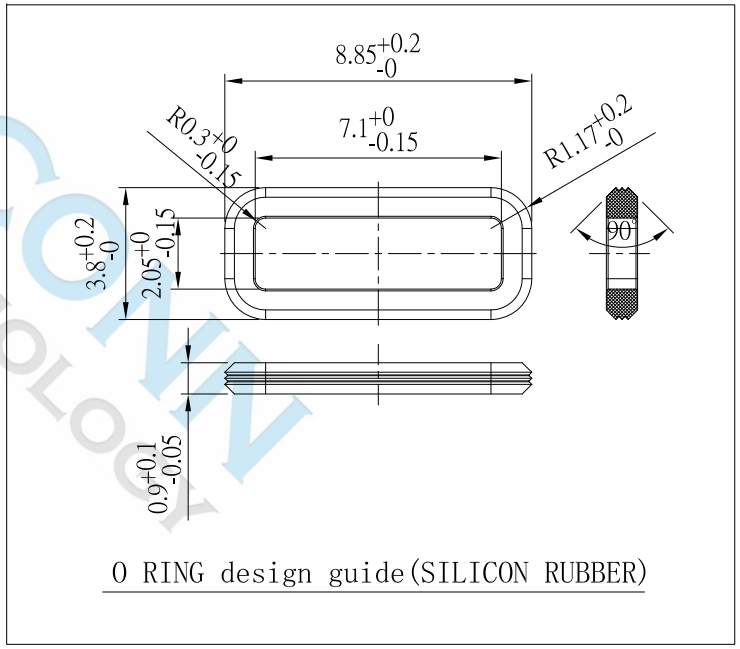

O RING design guide(SILICON RUBBER)

WISCONN TECHNOLOGY

DIMENSIONS TOLERANCE METRIC	UNITS	MM	FINISH	SEE NOTE	CH'K	Calvin	DRAW NAME MICRO USB2.0 B TYPE IPX7 Vertical SMT H:5.2mm		WISCONN Technology Co.,Ltd					
Up to 5 ±0.2 Above 5~15 ±0.3 Above 15~30 ±0.4 Above 30~50 ±0.5 Angle ±0.3°	QT'Y	N/A	DRAW	Johnson	APP'D	Selena	PART NUMBER	WMRU2-5-FWP7V63D18P7	Tel:+886-2-2790-1979 Fax:+886-2-2790-1569					
	MT'L	SEE NOTE	DE'N	Mike	DATE	MAR.21.2018	DRAW NUMBER	T002	SCALE 1/1	SIZE A4	SHEET 1	REV. A		
							FILE NAME .DWG							