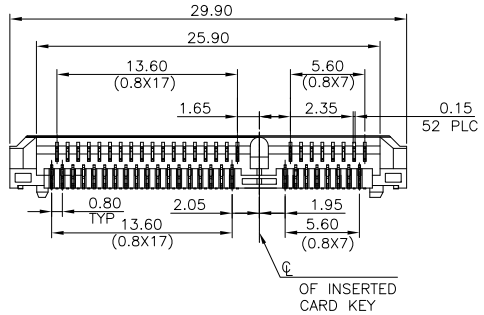

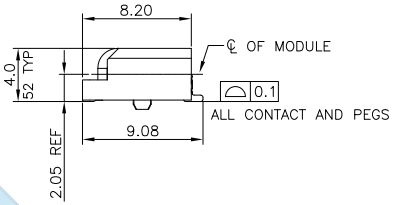

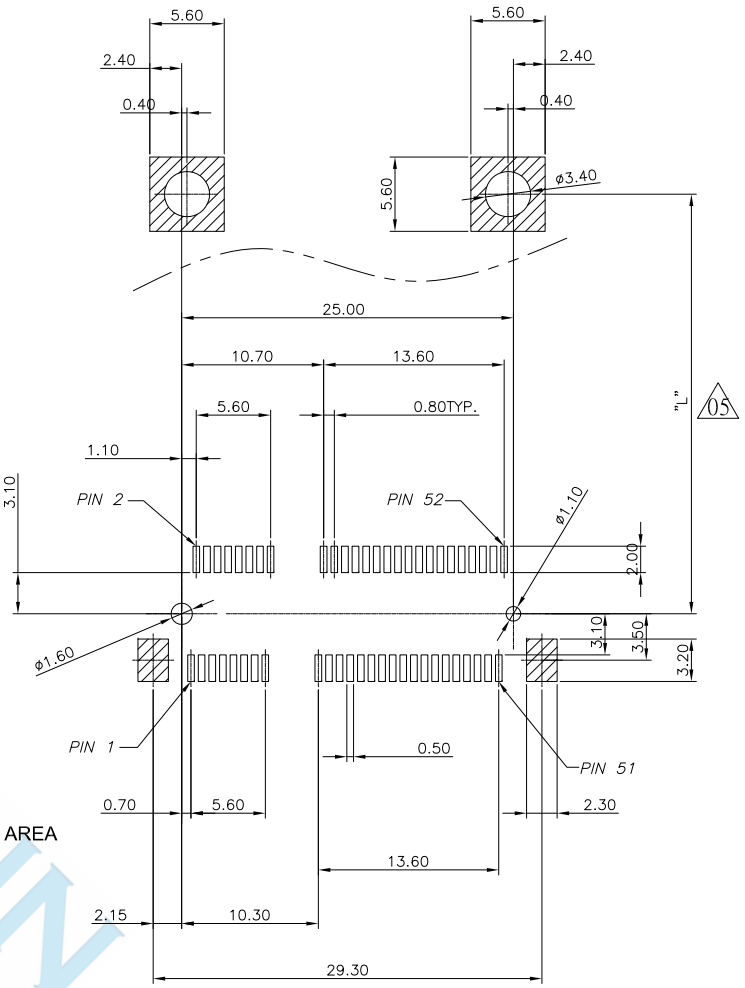

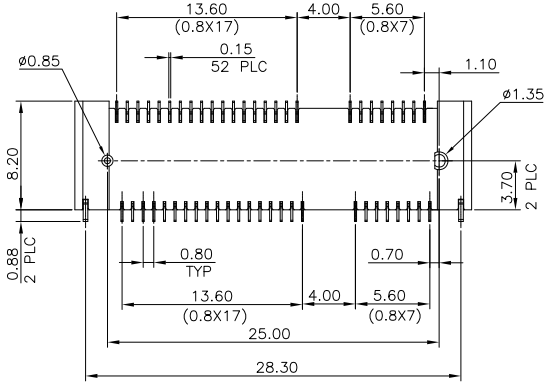

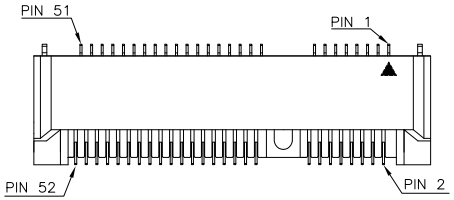

NOTES:

1.MATERIAL:

HOUSING: THERMOPLASTIC , BLACK COLOR ,
FLAME RESISTANCE UL94-V0.

CONTACTS: COPPER ALLOY, THICKNESS 0.20mm.

SOLDER PEGS: COPPER ALLOY, THICKNESS 0.2mm.

2.MSL LEVEL:

MSL(MOISTURE SENSITIVITY LEVELS)=1

3.FINISHED:

CONTACTS: GOLD PLATING ON CONTACT AREA AND SOLDER AREA
50u" MIN. NICKEL UNDER-PLATING OVER ALL.

SOLDER PEGS: 50~120u" TIN PLATING OVER 50~120u"
NICKEL UNDER-PLATING OVER ALL.

4.SPECIFICATION

CURRENT RATING : 0.5A 50V AC/DC

CONTACT RESISTANCE : 55 m OHM MAX.

INSULATION RESISTANCE : 500 M OHM MIN. AT 500V DC

OPERATING TEMPERATURE : -55°C~80°C

Recommended P.C.Board Layout.
FOR STAND OFF TYPE

05	
MODULE SIZE	L
HALF SIZE	23.9
FULL SIZE	48.05

DIMENSIONS TOLERANCE METRIC													
Up to 5 ±0.2	UNITS	MM	FINISH	SEE NOTE	CH'K	Calvin	DRAW NAME		WISCONN Technology Co.,Ltd				
Above 5~15 ±0.3							MINI PCI-E 本體 4.0H						
Above 15~30 ±0.4	QT'Y	N/A	DRAW	Johnson	APP'D	Selena	PART NUMBER	WMPE-52FLBSR-40	Tel:+886-2-2790-1979 Fax:+886-2-2790-1569				
Above 30~50 ±0.5													
Angle ±0.3°	MT'L	SEE NOTE	DE'N	Mike	DATE	February.23 .2019	DRAW NUMBER	T057	SCALE 1/1	SIZE A4	SHEET 1	REV. A	
							FILE NAME .DWG						

WISCONN TECHNOLOGY