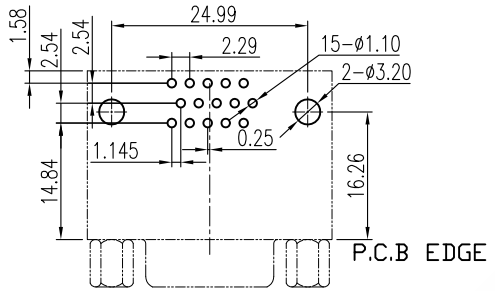

RECOMMENDED P.C.B LAYOUT

INSPECTION DIMENSION:(A)~(H)

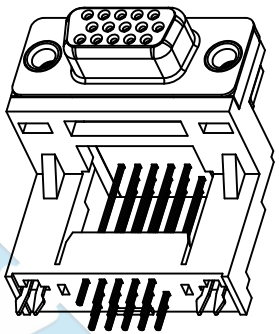

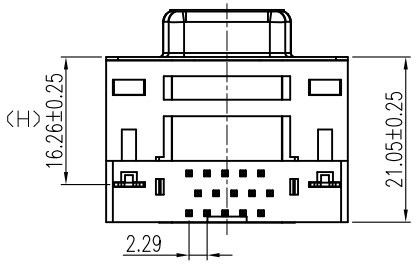

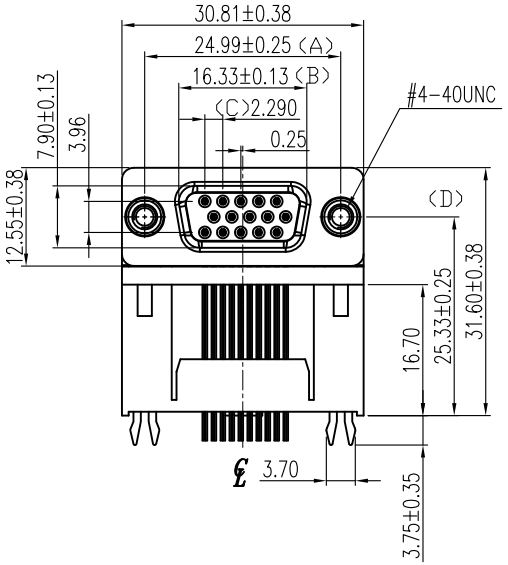

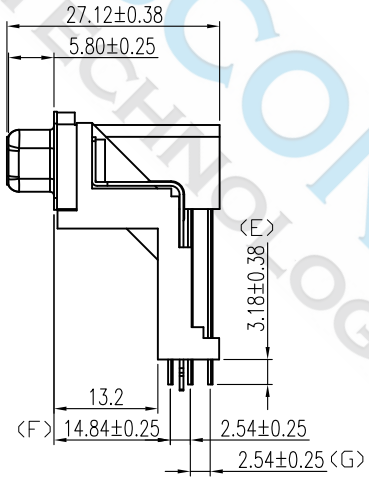

SPECIFICATIONS

1. D-SUB
1.1 Voltage: 250 VAC(RMS) Max.
1.2 Current Rating: 3 Ampere per Contact
1.3 Contact Resistance: 25 Milliohms Max.
1.4 Insulation Resistance: 5000 Megohms Min.
1.5 Dielectric Withstanding Voltage: 1000V AC(RMS)
1.6 Total Mating Force: 6.0 Kgf Max.
1.7 Total Unmating Force: 1.2 Kgf Min.
1.8 Operating Temperature: -55°C to +85°C

NOTES

1. MATERIAL:
   Housing:PBT, UL 94V-0, Color:Blue.
   Bracket:PBT, UL 94V-0, Color:Blue.
   Terminal:Copper Alloy.
   Shell:SPCC.
   Boardlock:Steel.
   Rivet:Copper Alloy.
2. FINISH:
   Terminal:Gold Plated over Nickel at Contact Area.
   Tin Plated over Nickel at Solder Ared.
   Shell:Nickel Plated.
   Boardlock:Tin Plated.
   Rivet:Nickel Plated.
3. This Product is LEAD-FREE & RoHS Compliance Product.

DIMENSIONS TOLERANCE METRIC								
Up to 5 ±0.2 Above 5~15 ±0.3 Above 15~30 ±0.4 Above 30~50 ±0.5 Angle ±0.3°	UNITS	MM	FINISH	SEE NOTE	CH'K	Calvin	DRAW NAME D-SUB 15/F Blue 90D HI-DEN	WISCONN Technology Co.,Ltd
	QT'Y	N/A	DRAW	Johnson	APP'D	Selena	PART NUMBER: WDBF-15-AFBURH17	Tel:+886-2-2790-1979 Fax:+886-2-2790-1569
	MT'L	SEE NOTE	DE'N	Mike	DATE	NOV.16.2017	DRAW NUMBER: T055 FILE NAME .DWG	SCALE 1/1 SIZE A4 SHEET 1 REV. A