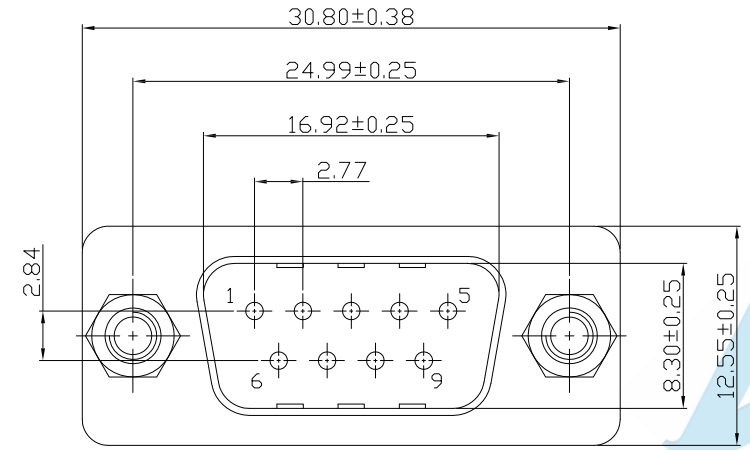

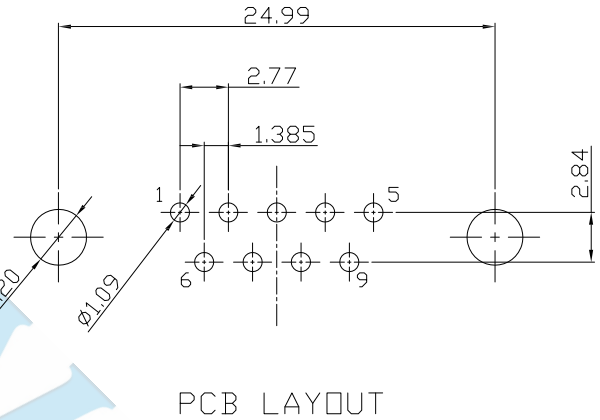

MATERIALS:
1. Housing: PBT (UL 94V-0), Black
2. Contacts: Brass
3. Shell: SPCC
4. Back Screws: Copper Alloy(Lead ≦40000PPM)
5. Screw: SPCC(Lead ≦40000PPM)

FINISH:
1. Contacts: Gold Flash Plated on Contact Area
   Sn Plated on Soldertails
   Nickel Under Plated Over All
2. Shell: Nickel Plated
3. Back Screws: Nickel Plated
4. Screw: Nickel Plated

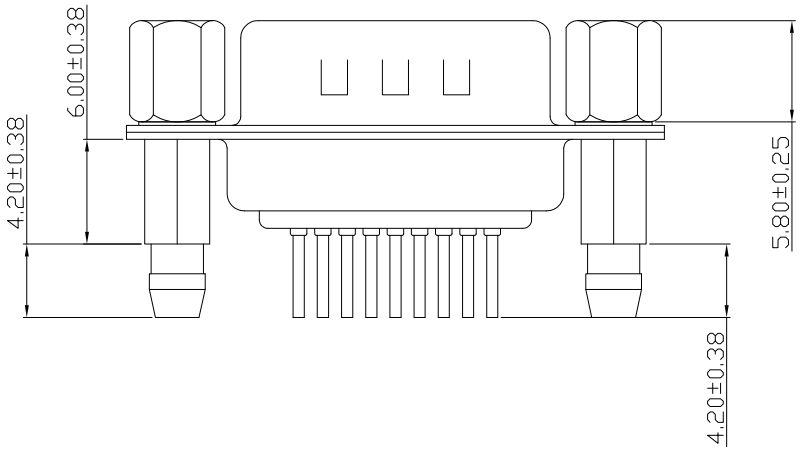

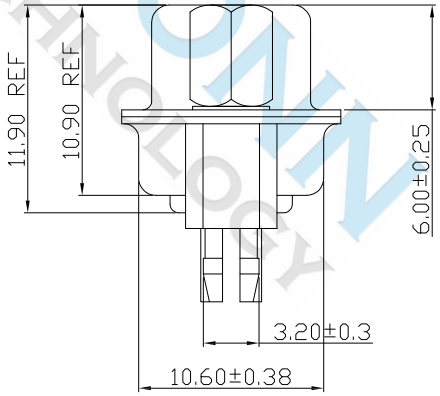

WISCONN TECHNOLOGY

DIMENSIONS TOLERANCE METRIC	UNITS	MM	FINISH	SEE NOTE	CH'K	Calvin	DRAW NAME DB 9M 180度 DIP 後鉚6.0mm銅柱 鉚鎖5.8螺絲		WISCONN Technology Co.,Ltd						
Up to 5 ±0.2 Above 5~15 ±0.3 Above 15~30 ±0.4 Above 30~50 ±0.5 Angle ±0.3°	QT'Y	N/A	DRAW	Johnson	APP'D	Selena	PART NUMBER	WDBM-09-JFBV21	Tel:+886-2-2790-1979 Fax:+886-2-2790-1569						
	MT'L	SEE NOTE	DE'N	Mike	DATE	July . 17 . 2020	DRAW NUMBER	T039	SCALE	1/1	SIZE	A4	SHEET	1	REV. A
							FILE NAME .DWG								