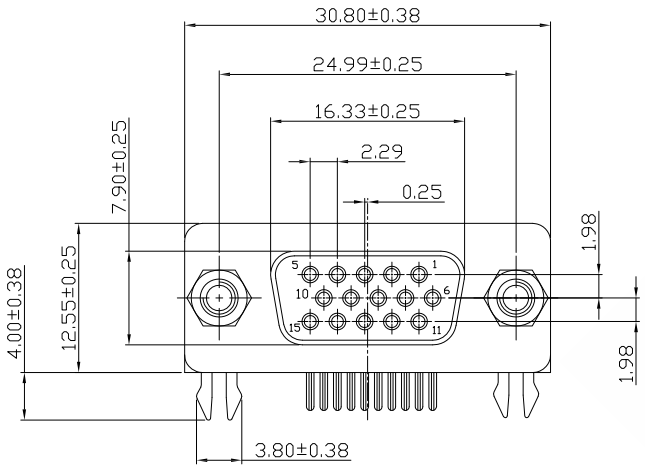

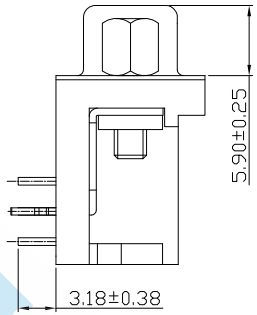

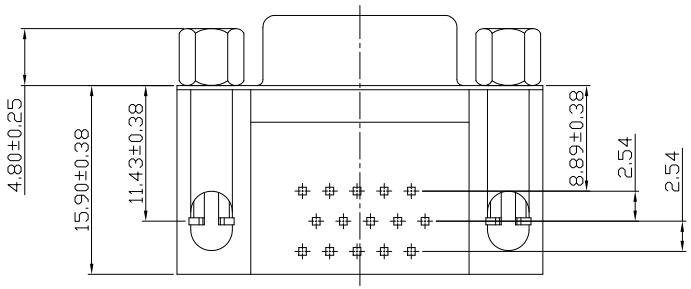

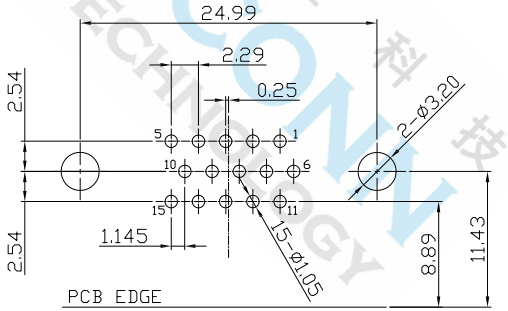

P.C.B. LAYOUT

MATERIALS:
1. Housing: PBT (UL 94V-0), Black
2. Contacts: Brass
3. Shell: SPCC
4. Rivet: Copper Alloy(Lead ≦40000PPM)
5. Board Lock: SPCC
6. Screw: SPCC(Lead ≦40000PPM)

FINISH:
1. Contacts: Gold Flash Plated on Contact Area
   Sn Plated on Soldertails
   Nickel Under Plated Over All
2. Shell: Nickel Plated
3. Rivet: Nickel Plated
4. Board Lock: Sn Plated
5. Screw: Nickel Plated

DIMENSIONS TOLERANCE METRIC														
Up to 5 ±0.2 Above 5~15 ±0.3 Above 15~30 ±0.4 Above 30~50 ±0.5 Angle ±0.3°	單位(UNITS)	MM	處理(FINISH)	SEE NOTE	審校(CH'K)	Calvin	圖名(NAME)	D-SUB 8.89mm 15F 黑色 G/F	WISCONN Technology Co.,Ltd					
	數量(QT'Y)	N/A	繪圖(DRAW)	Johnson	核准(APP'D)	Selena	料號(PART NUMBER)	WDBF-15xxFPBDR-8.89	Tel:02-2790-1979 Fax:02-2790-1569					
	材料(MT'L)	SEE NOTE	設計(DE'N)	Mike	日期(DATE)	AUG.24.2017	圖號(DRAW NUMBER)	T039	比例(SCALE) 1/1	圖紙(SIZE) A4	頁次(SHEET) 1	版次(REV.) A		
							圖檔(FILE NAME .DWG)							