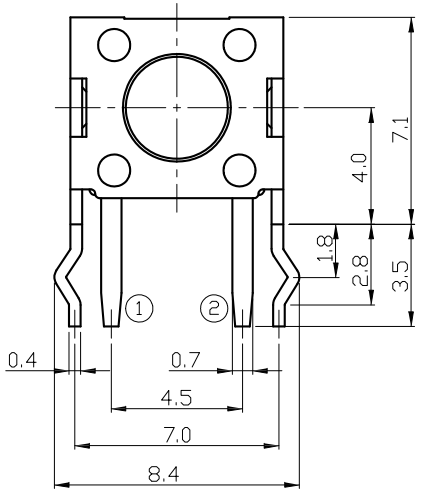

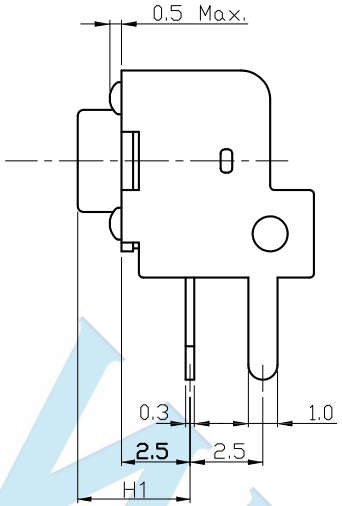

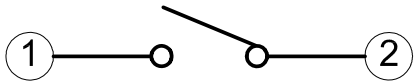

CIRCUIT DIAGRAM

SPECIFICATION

Rating	DC 12V 50mA Max.					
Contact Resistance	100mΩ Max.					
Travel	0.25 ± 0.1mm					
Operating Force	1	130 ± 30gf	2	160 ± 50gf	3	250 ± 50gf
Operating Life (cycles)	100,000					

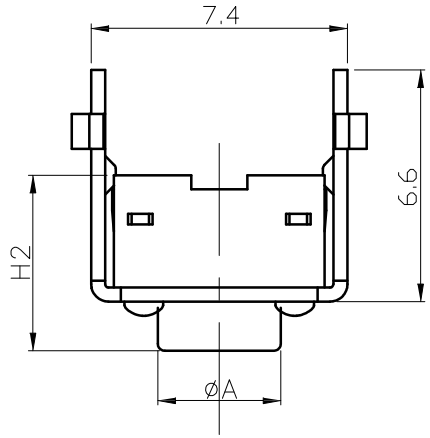

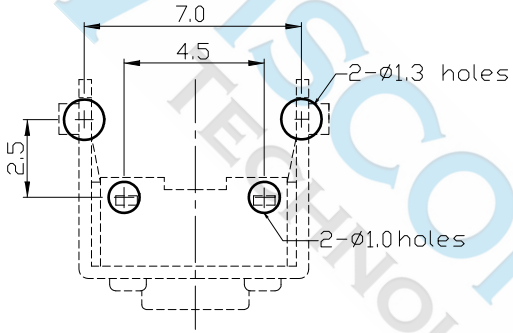

P.C.B LAYOUT MOUNTING PATTERN

NO.	DESCRIPTION	QTY	MATERIAL	PLATING
A	STEM	1	PA6T	
B	CASE	1	PA6T	
C	COVER	1	SPCC	Ni plated
D	CONTACT	1	PHOSPHOR BRONZE	Ag plated
E	TERMINAL	2	BRASS	Ag plated

MODEL NO.	WTS-A02V	WTS-A02VL	WTS-A02VA	WTS-A02VAL	WTS-A02VQ	WTS-A02VQL	WTS-A02VB	WTS-A02VE	WTS-A02VR	WTS-A02VC	WTS-A02VCL	WTS-A02VDS	WTS-A02VD	WTS-A02VY	WTS-A02VYL	WTS-A02VW	WTS-A02VFL	WTS-A02VF	WTS-A02VK	WTS-A02VG	WTS-A02VOL	WTS-A02VZ	WTS-A02VZL	WTS-A02VJ	WTS-A02VH	WTS-A02VDY
H1 (mm)	3.15	3.35	3.85	4.35	4.85	5.35	5.85	6.15	6.35	6.85	7.35	7.85	8.35	8.85	9.35	9.85	10.85	11.35	11.85	12.35	13.35	13.85	14.85	15.15	15.85	18.15
H2 (mm)	4.30	4.50	5.00	5.50	6.00	6.50	7.00	7.30	7.50	8.00	8.50	9.00	9.50	10.00	10.50	11.00	12.00	12.50	13.00	13.50	14.50	15.00	16.00	16.30	17.00	19.30
ØA (mm)	3.50	3.50	3.50	3.40	3.40	3.40	3.40	3.40	3.40	3.40	3.40	3.40	3.40	3.00	3.00	3.00	3.00	3.00	3.00	3.00	3.00	3.00	3.00	3.00	3.00	3.00

DIMENSIONS TOLERANCE
METRIC
Up to 5 ±0.2
Above 5~15 ±0.3
Above 15~30 ±0.4
Above 30~50 ±0.5
Angle ±0.3°

UNITS	MM	FINISH	SEE NOTE	CH'K	Calvin
QT'Y	N/A	DRAW	Johnson	APP'D	Selena
MT'L	SEE NOTE	DE'N	Mike	DATE	July . 14 . 2022

DRAW NAME
TACT SWITCH

PART NUMBER	WTS-A02Vx-x
DRAW NUMBER	T002
FILE NAME .DWG	

WISCONN Technology Co.,Ltd
Tel:+886-2-2790-1979 Fax:+886-2-2790-1569

SCALE	1/1	SIZE	A4	SHEET	1	REV.	A