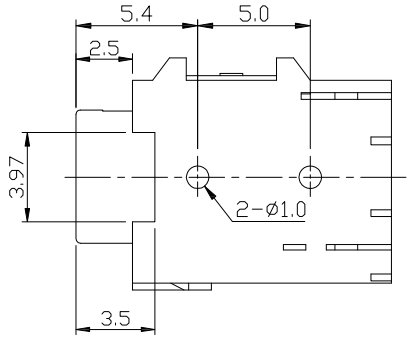

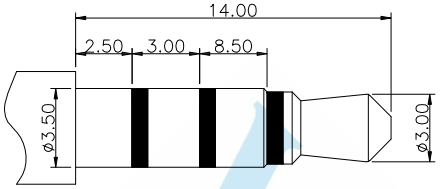

ø3.50mm 4 POLE PLUG

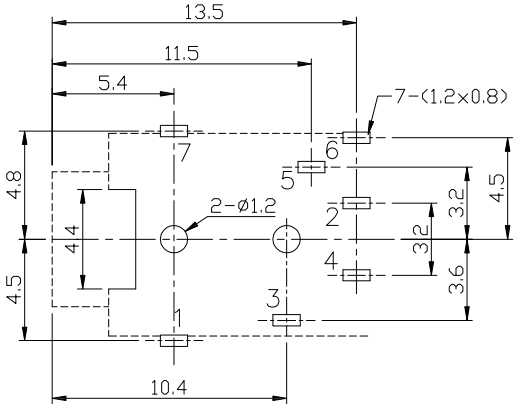

P.C.B LAYOUT
TOP VIEW

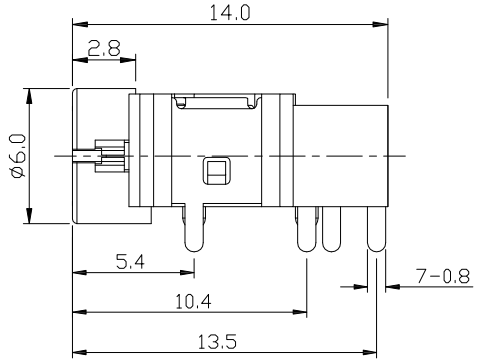

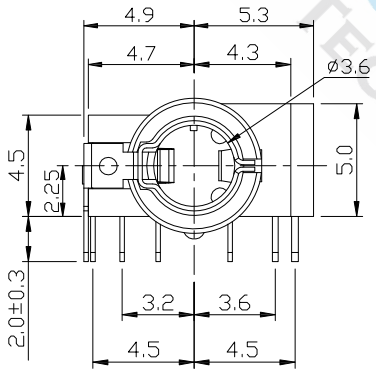

SPECIFICATION

1.Rating ：DC 30V 0.5A

2.Contact resistance：≤30mΩ

3.Insulation resistance：≥100MΩ

4.Withstand voltage：500VAC

5.Insertion and extraction force：3-20N

6.life test：5,000 cycles

SCHEMATIC

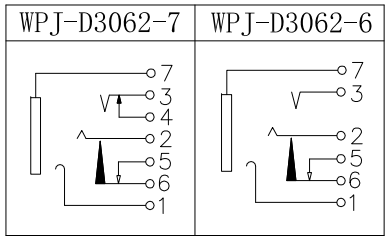

NO.	DESCRIPTION	QTY	MATERIAL	PLATING
⑧	HOUSING	1	PBT/PA9T	
⑦	AXIS SUPPORT	1	PHOSPHOR BRONZE	Au-Plating
⑥	6#CONTACT FOOT	1	PHOSPHOR BRONZE	Ag-Plating
⑤	5#CONTACT FOOT	1	SUS	Ag-Plating
④	4#CONTACT FOOT	1	BRASS	Ag-Plating
③	3#CONTACT FOOT	1	PHOSPHOR BRONZE	Ag-Plating
②	2#CONTACT FOOT	1	SUS	Ag-Plating
①	1#CONTACT FOOT	1	PHOSPHOR BRONZE	Ag-Plating

DIMENSIONS TOLERANCE
METRIC

Up to 5	±0.2
Above 5~15	±0.3
Above 15~30	±0.4
Above 30~50	±0.5
Angle	±0.3°

單位(UNITS)	MM	處理(FINISH)	SEE NOTE	審校(CH'K)	Calvin
數量(QT'Y)	N/A	繪圖(DRAW)	Johnson	核准(APP'D)	Selena
材料(MT'L)	SEE NOTE	設計(DE'N)	Mike	日期(DATE)	MAY.22.2017

圖名(NAME) PHONE JACK

料號(PART NUMBER) WPJ-D3062-x

圖號(DRAW NUMBER) T002

圖檔(FILE NAME .DWG)

WISCONN Technology Co.,Ltd
Tel:02-2790-1979 Fax:02-2790-1569

比例 (SCALE)	1/1	圖紙 (SIZE)	A4	頁次 (SHEET)	1	版次 (REV.)	A

WISCONN TECHNOLOGY 威盟科技