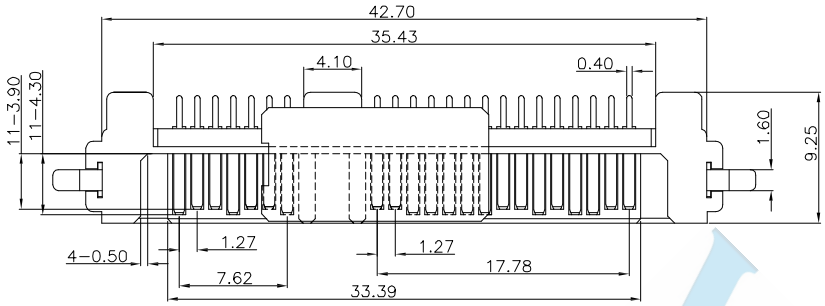

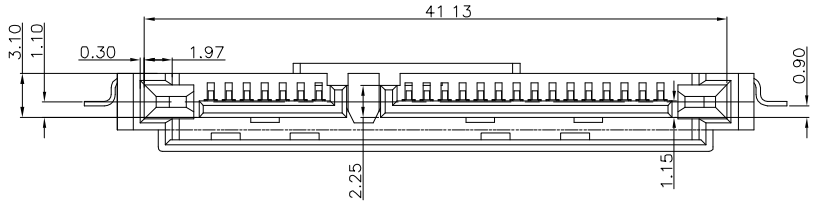

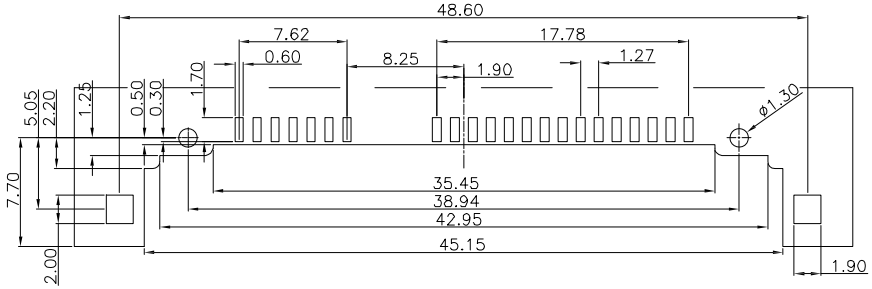

RECOMMENDED PCB LAYOUT

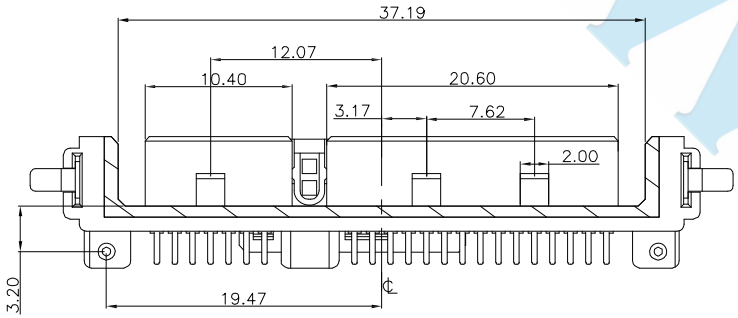

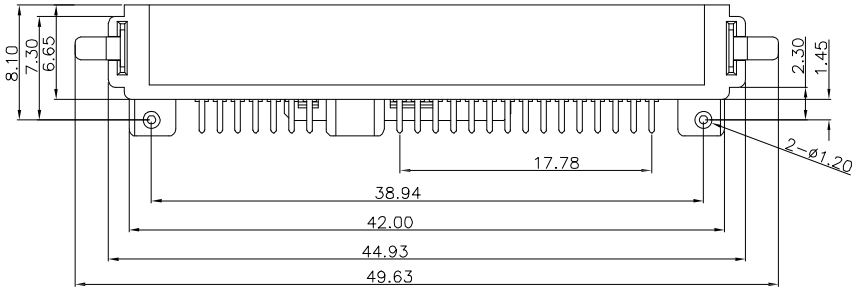

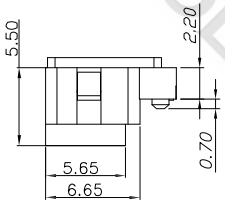

NOTES:

1.MATERIAL:

1.1 HOUSING : LCP,UL94 V-0, COLOR:BLACK

1.2 CONTACT: BRASS

1.3 PEG : BRASS

2.FINISH:

2.1 CONTACT : Plated Gold in Mating Area ;

Tin Plated on Solder Balls ;

Nickel under plated overall

2.2 PEG : Tin Plated on Solder Balls ;

Nickel under plated overall

WISCONN TECHNOLOGY

DIMENSIONS TOLERANCE METRIC								
Up to 5 ±0.2	UNITS	MM	FINISH	SEE NOTE	CH'K	Calvin	DRAW NAME SATA 7+15PMale 沉板式 SMT 反向 板上高2.2mm	WISCONN Technology Co.,Ltd
Above 5~15 ±0.3	QT'Y	N/A	DRAW	Johnson	APP'D	Selena	PART NUMBER WSAM-22-xxBSR24	Tel:+886-2-2790-1979 Fax:+886-2-2790-1569
Above 15~30 ±0.4	MT'L	SEE NOTE	DE'N	Mike	DATE	July.17.2019	DRAW NUMBER T002	SCALE 1/1 SIZE A4 SHEET 1 REV. A
Above 30~50 ±0.5							FILE NAME .DWG	
Angle ±0.3°								