1. Electrical Specifications:@25℃

1.1. Isolation Voltage: 1500V/AC(Input to Output)

1.2. OCL:350uH Minimum @100KHz 100mV 8mA DC

1.3. Instertion Loss: -1.2dB Maximum @100KHz-100MHz

1.4. Return Loss: -18dB Minimum @1MHz-30MHz

-14dB Minimum @30MHz-60MHz

-12dB Minimum @60MHz-80MHz

-10dB Minimum @80MHz-100MHz

1.5. Common Mode Rejection: -30dB Minimum @1MHz-100MHz

1.6. Cross Talk: -30dB Minimum @1MHz-100MHz

2. Operating and Storage Temperature:

2.1. Operating Temperature:-40℃ to +85℃

2.2 .Storage Temperature:-40℃ to +85℃

3. Schematics:

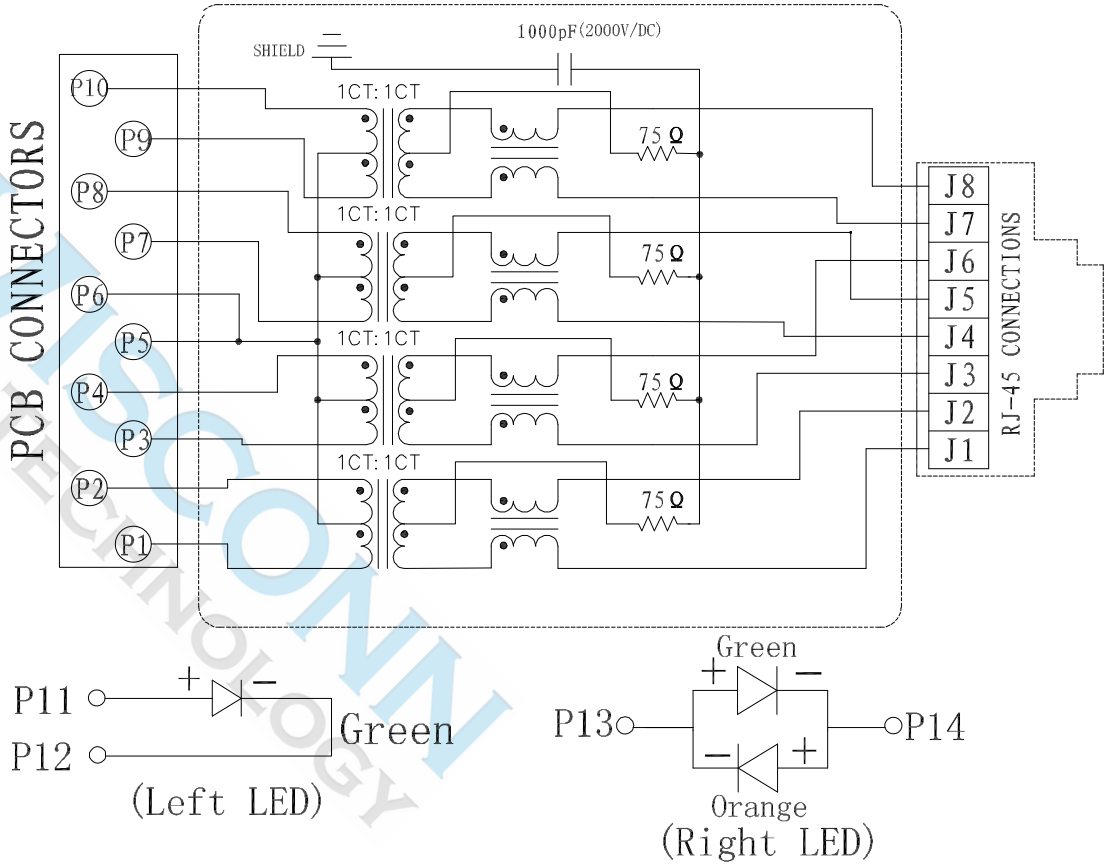

WISCONN TECHNOLOGY

DIMENSIONS TOLERANCE METRIC Up to 5 ±0.2 Above 5~15 ±0.3 Above 15~30 ±0.4 Above 30~50 ±0.5 Angle ±0.3°	UNITS	MM	FINISH	SEE NOTE	CH'K	Calvin	DRAW NAME RJ45 1X1 1G 90D TU LED(G-GO) L21.6MM		WISCONN Technology Co.,Ltd Tel:+886-2-2790-1979 Fax:+886-2-2790-1569						
	QT'Y	N/A	DRAW	Johnson	APP'D	Selena	PART NUMBER	WRJ-1108E5011-2							
	MT'L	SEE NOTE	DE'N	Mike	DATE	May .25.2021	DRAW NUMBER	C006	SCALE	1/1	SIZE	A4	SHEET	1	REV. A
							FILE NAME .DWG								

4. Mechanicals:

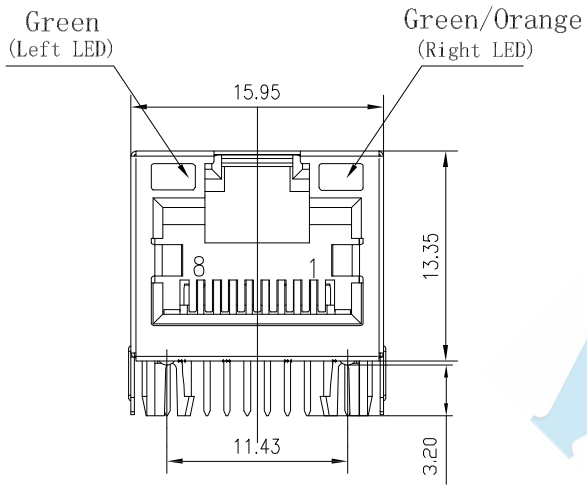

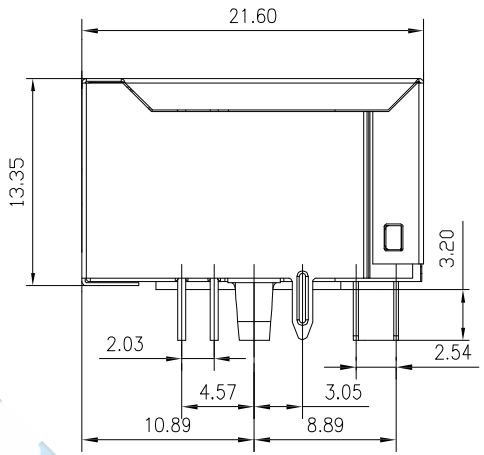

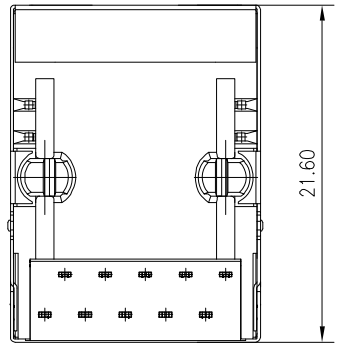

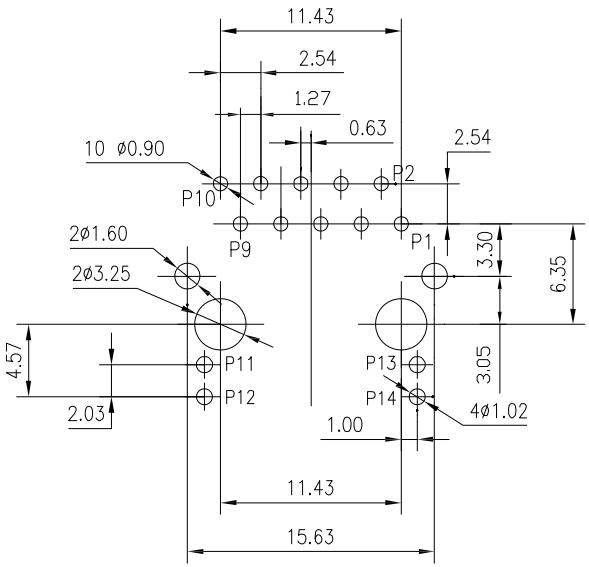

P.C.B RECOMMENDED HOLE LAYOUT SEEEN FROM COMPONENT SIDE.

ALL CENTERLINE DIMENSIONS ARE BASIC

LED Specification

Standard LED Color	LED Wavelength	Forward (V MAX)	Typical (V TYP)	Luminous Intensity
Green	560-580 nm	2.5V	2.1-2.2V	9-25 MCD
Yellow	580-610 nm	2.5V	2.1-2.2V	9-30 MCD
Orange	580-610 nm	2.5V	2.1-2.2V	50-100 MCD

1. LED intensity/wavelength measured with Photo Research PR-650 Colormeter
2. With a forward current of 20 mA, Absolute Maximum Ratings (Ta=25℃)

4.1. Connector Material:

Housing: Thermoplastic UL94 V-0

Contact/Shield: Cooper alloy

Shield Plating: Nickel

Contact Plating: Selective gold 6u"; 15u"; 30u"; 50u" Min

WISCONN TECHNOLOGY

DIMENSIONS TOLERANCE METRIC	UNITS	MM	FINISH	SEE NOTE	CH'K	Calvin	DRAW NAME		WISCONN Technology Co., Ltd
Up to 5 ±0.2 Above 5~15 ±0.3 Above 15~30 ±0.4 Above 30~50 ±0.5 Angle ±0.3°	QT'Y	N/A	DRAW	Johnson	APP'D	Selena	RJ45 1X1 1G 90D TU LED(G-GO) L21.6MM		Tel:+886-2-2790-1979 Fax:+886-2-2790-1569
							PART NUMBER	WRJ-1108E5011-2	
	MT'L	SEE NOTE	DE'N	Mike	DATE	May .25.2021	DRAW NUMBER	C006	SCALE 1/1 SIZE A4 SHEET 2 REV. A
							FILE NAME .DWG		