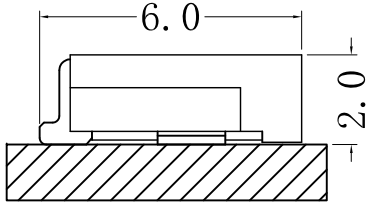

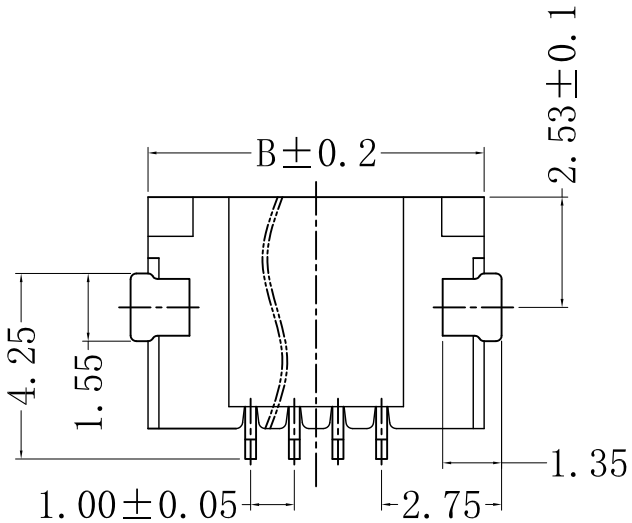

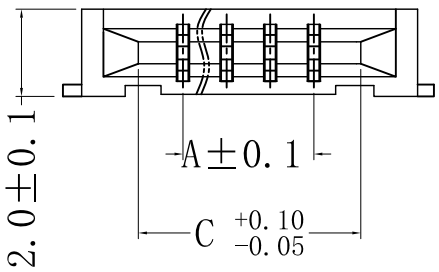

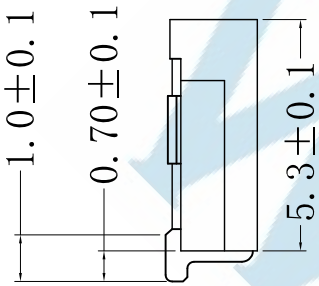

PIN NO.	DIM. A	DIM. B	DIM. C
4~N~20	N−1.0	N+3.7	N+1.1

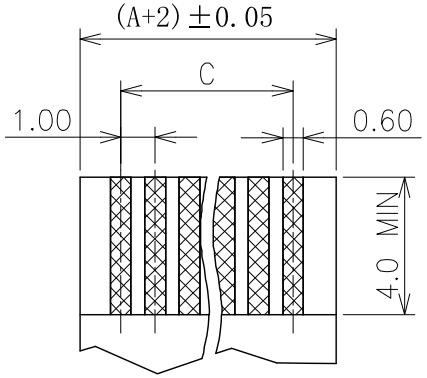

FPC/FFC T=0.30±0.05

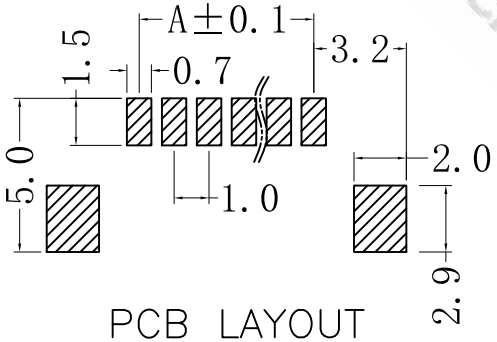

PCB LAYOUT

Material:
1.1 Housing: thermoplastic high temp. UL94V−0; Color: Natural.
1.2 Terminal: Copper Alloy.

Electrical:
2.1 Current Rating: 1.0 AMP.
2.2 Dielectric Withstanding Voltage: 500V AC MIN.
2.3 Insulation Resistance: 500MΩ MIN.
2.4 Contact Resistance: 30mΩ MAX.

WISCONN TECHNOLOGY

DIMENSIONS TOLERANCE METRIC								
Up to 5 ±0.2	單位(UNITS)	MM	處理(FINISH)	SEE NOTE	審校(CH'K)	Calvin	圖名(NAME) FPC 1.0PITCH 2.0H 無蓋 雙接臥式 SMT TYPE	WISCONN Technology Co.,Ltd
Above 5~15 ±0.3	數量(QT'Y)	N/A	繪圖(DRAW)	Johnson	核准(APP'D)	Selena	料號(PART NUMBER) WF1020RN-xx-P2-D-R	Tel:02-2790-1979 Fax:02-2790-1569
Above 15~30 ±0.4	材料(MT'L)	SEE NOTE	設計(DE'N)	Mike	日期(DATE)	AUG.05.2015	圖號(DRAW NUMBER) T001	比例(SCALE) 1/1 · 圖紙(SIZE) A4 · 頁次(SHEET) 1 · 版次(REV.) A
Above 30~50 ±0.5							圖檔(FILE NAME .DWG)	
Angle ±0.3°								