## 1. Electrical Specifications:@25℃

1.1. Isolation Voltage: 1500V/AC(Input to Output)

1.2. OCL:350uH Minimum @100KHz 100mV 8mA DC

1.3. Instertion Loss: -1.2dB Maximum @100KHz-100MHz

1.4. Return Loss: -18dB Minimum @1MHz-30MHz
-14dB Minimum @30MHz-60MHz
-12dB Minimum @60MHz-80MHz

1.5. Common Mode Rejection: -30dB Minimum @1MHz-100MHz

1.6. Cross Talk: -30dB Minimum @1MHz-100MHz

## 2. Operating and Storage Temperature:

2.1. Operating Temperature:-40℃ to +85℃

2.2. Storage Temperature:-40℃ to +85℃

## 3. Schematics:

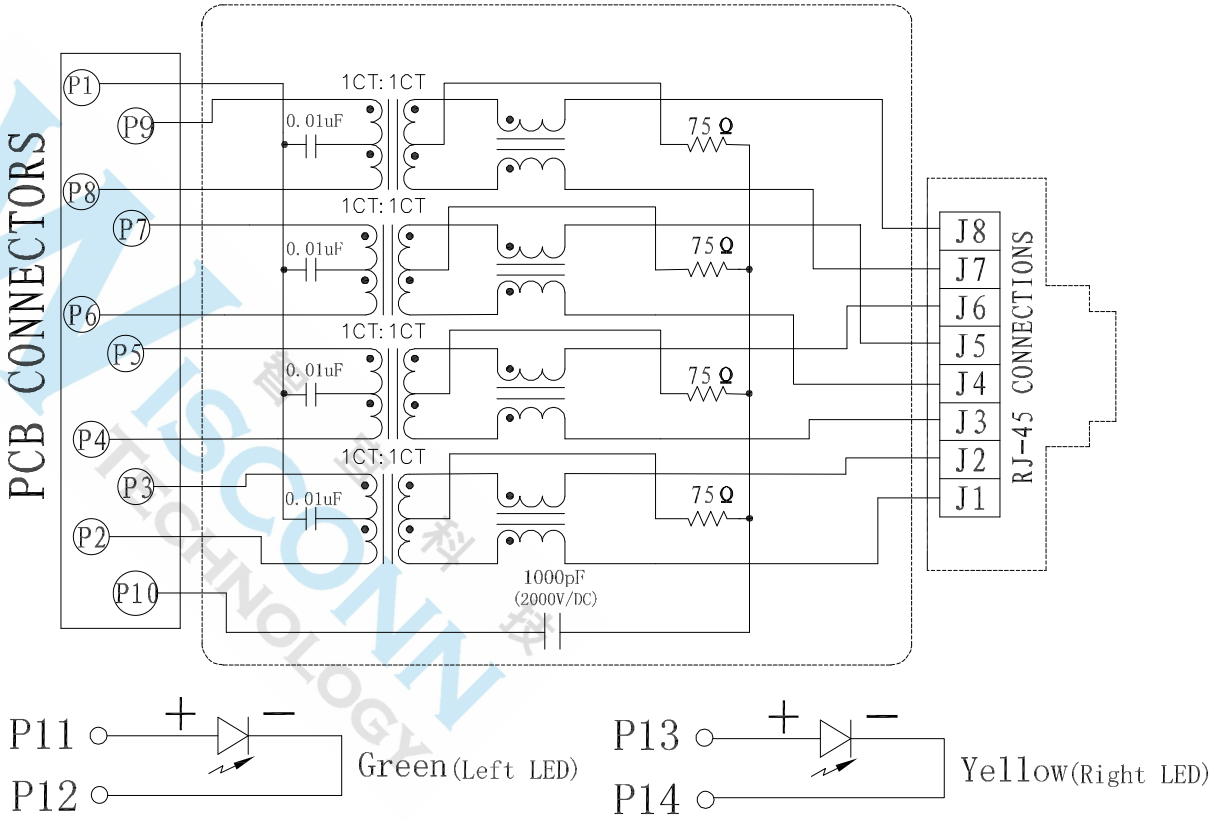


WISCONN TECHNOLOGY

| DIMENSIONS TOLERANCE METRIC | | | | | | | | | |
|---|---|---|---|---|---|---|---|---|---|
| Up to 5 ±0.2 | 單位(UNITS) | MM | 處理(FINISH) | SEE NOTE | 審校(CH'K) | Calvin | 圖名(NAME) RJ45 1x1Port Jack With 100/1000 Base-T 左綠右黃(4.06mm) Tab Down L21.35mm | WISCONN Technology Co.,Ltd | |
| Above 5~15 ±0.3 | 數量(QT'Y) | N/A | 繪圖(DRAW) | Johnson | 核准(APP'D) | Selena | 料號(PART NUMBER) WRJ-1108F10114 | Tel:02-2790-1979 Fax:02-2790-1569 | |
| Above 15~30 ±0.4 | 材料(MT'L) | SEE NOTE | 設計(DE'N) | Mike | 日期(DATE) | JUL.05.2017 | 圖號(DRAW NUMBER) C006 | 比例(SCALE) 1/1 | 圖紙(SIZE) A4 |
| Above 30~50 ±0.5 | | | | | | | 圖檔(FILE NAME .DWG) | 頁次(SHEET) 1 | 版次(REV.) A |
| Angle ±0.3° | | | | | | | | | |

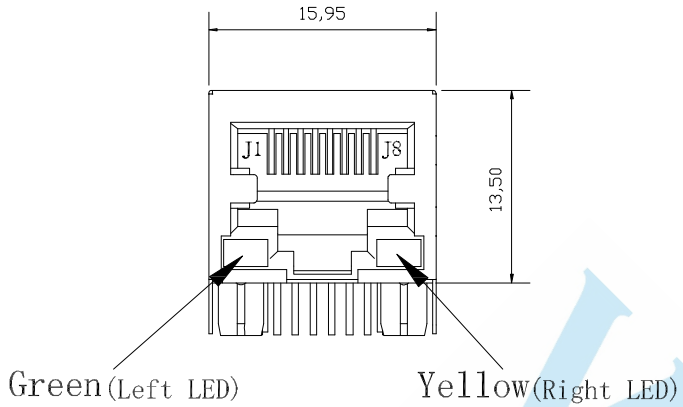


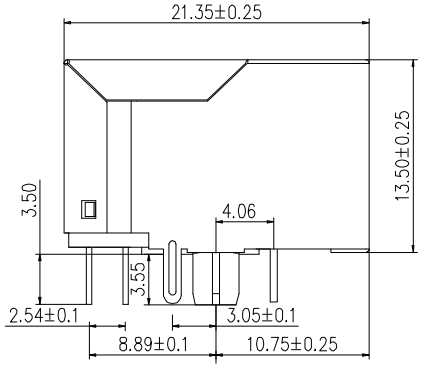


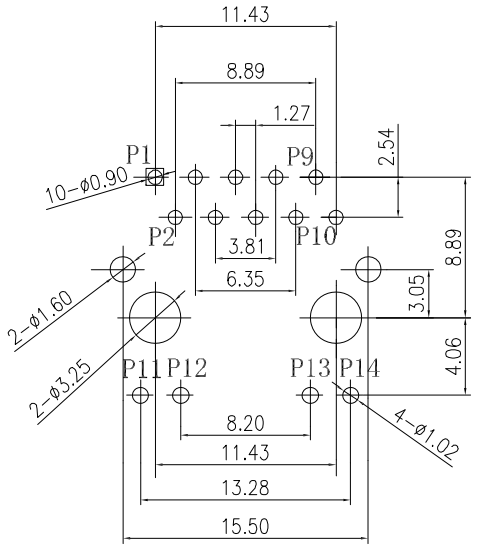


P.C.B RECOMMENDED HOLE LAYOUT SEEEN FROM COMPONENT SIDE.
ALL CENTERLINE DIMENSIONS ARE BASIC

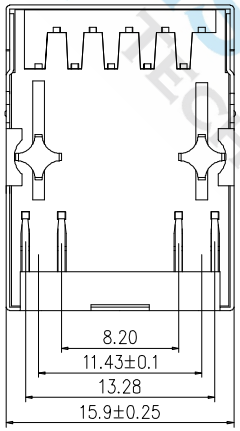


## LED Specification

| Standard LED Color | LED Wavelength | Forward (V MAX) | Typical (V TYP) | Luminous Intensity |
|---|---|---|---|---|
| Green | 560-580 nm | 2.5V | 2.1-2.2V | 9-25 MCD |
| Yellow | 580-610 nm | 2.5V | 2.1-2.2V | 9-30 MCD |

1. LED intensity/wavelength measured with Photo Research PR-650 Colormeter
2. With a forward current of 20 mA, Absolute Maximum Ratings (Ta=25℃)

4.1. Connector Material:
Houising:Thermoplastic UL94 V-0
Contact/Shield:Cooper alloy
Shield Plating:Nickel
Contact Plating:Selective gold 6u"; 15u"; 30u"; 50u"Min

4.2. Tolerances comply with F.C.C dimension requirements

4.3. Durability:800 mating Min

| DIMENSIONS TOLERANCE METRIC | | | | | | | | |
|---|---|---|---|---|---|---|---|---|
| Up to 5 ±0.2<br>Above 5~15 ±0.3<br>Above 15~30 ±0.4<br>Above 30~50 ±0.5<br>Angle ±0.3° | 單位(UNITS) | MM | 處理(FINISH) | SEE NOTE | 審校(CH'K) | Calvin | 圖名(NAME)<br>RJ45 1x1Port Jack With 100/1000 Base-T<br>左綠右黃(4.06mm) Tab Down L21.35mm | WISCONN Technology Co.,Ltd<br>Tel:02-2790-1979 Fax:02-2790-1569 |
| | 數量(QT'Y) | N/A | 繪圖(DRAW) | Johnson | 核准(APP'D) | Selena | 料號(PART NUMBER) WRJ-1108F10114 | |
| | 材料(MT'L) | SEE NOTE | 設計(DE'N) | Mike | 日期(DATE) | JUL.05.2017 | 圖號(DRAW NUMBER) C006<br>圖檔(FILE NAME .DWG) | 比例(SCALE) 1/1 圖紙(SIZE) A4 頁次(SHEET) 1 版次(REV.) A |