3. Schematics:

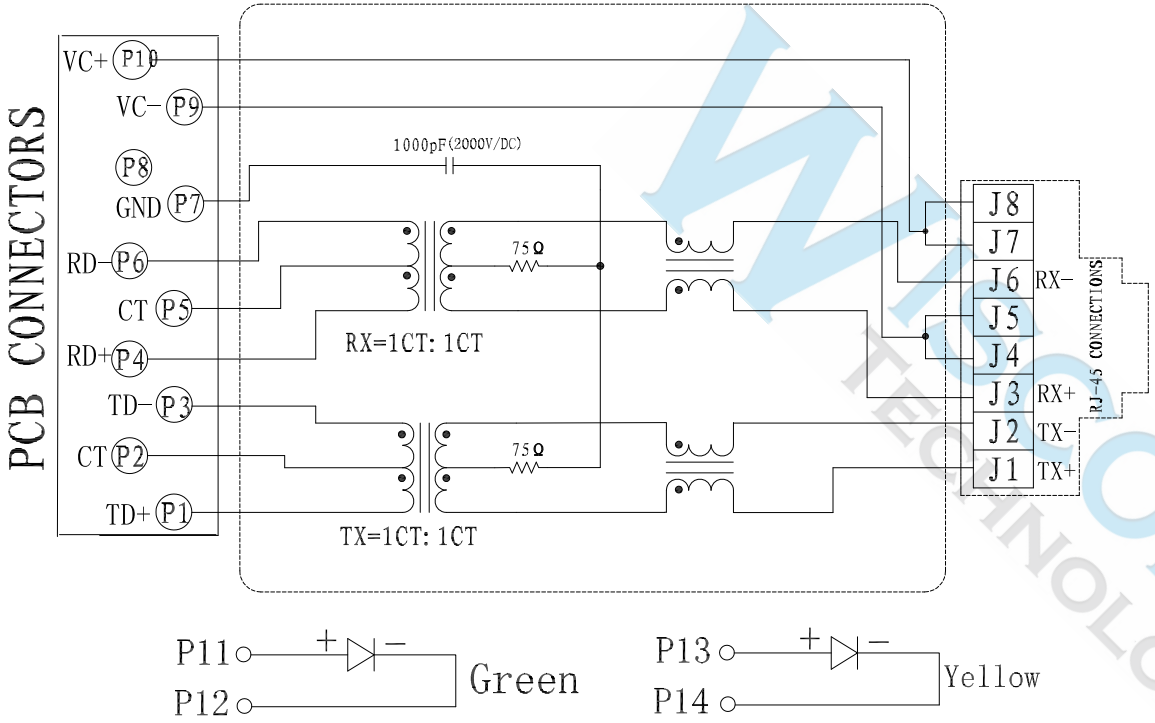

1*1 Port RJ-45 Jack
With 10/100 Base-T Magnetics Module

1. Electrical Specifications:@25℃

1.1. Isolation Voltage: 1500V/AC(Input to Output)

1.2. OCL:350uH Minimum @100KHz 100mV 8mA DC

1.3. Instertion Loss: -1.2dB Maximum @100KHz-100MHz

1.4. Return Loss: -18dB Minimum @1MHz-30MHz
-14dB Minimum @30MHz-60MHz
-12dB Minimum @60MHz-80MHz
-10dB Minimum @80MHz-100MHz

1.5. Common Mode Rejection: -30dB Minimum @1MHz-100MHz

1.6. Cross Talk: -30dB Minimum @1MHz-100MHz

2. Operating and Storage Temperature:

2.1. Operating Temperature:-40℃ to +85℃

2.2 . Storage Temperature:-40℃ to +85℃

WISCONN TECHNOLOGY

DIMENSIONS TOLERANCE METRIC Up to 5 ±0.2 Above 5~15 ±0.3 Above 15~30 ±0.4 Above 30~50 ±0.5 Angle ±0.3°	UNITS	MM	FINISH	SEE NOTE	CH'K	Calvin	DRAW NAME RJ45 1x1 180度 10PIN 10/100 左黃右綠(4.13mm) H:17.0mm		WISCONN Technology Co.,Ltd Tel:+886-2-2790-1979 Fax:+886-2-2790-1569					
	QT'Y	N/A	DRAW	Johnson	APP'D	Selena	PART NUMBER	WRJ-1104F2048-1						
	MT'L	SEE NOTE	DE'N	Mike	DATE	August . 12 . 2022	DRAW NUMBER	C006	SCALE	1/1	SIZE	A4	SHEET	1	REV.	A
							FILE NAME .DWG							

4. Mechanicals:

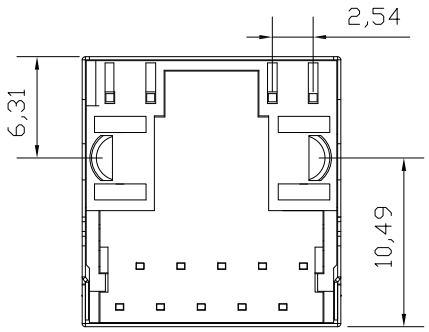

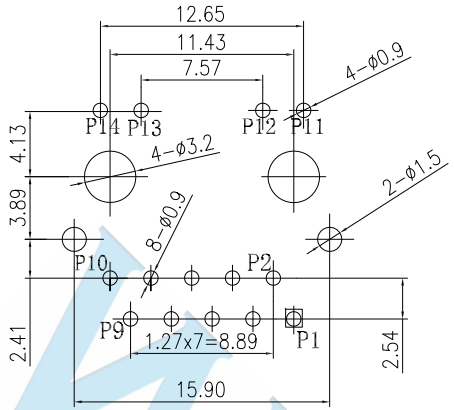

P.C.B RECOMMENDED HOLE LAYOUT SEEEN FROM COMPONENT SIDE.

ALL CENTERLINE DIMENSIONS ARE BASIC

LED Specification

Standard LED Color	LED Wavelength	Forward (V MAX)	Typical (V TYP)	Luminous Intensity
Green	560-580 nm	2.5V	2.1-2.2V	9-25 MCD
Yellow	580-610 nm	2.5V	2.1-2.2V	9-30 MCD

1. LED intensity/wavelength measured with Photo Research PR-650 Colormeter
2. With a forward current of 20 mA, Absolute Maximum Ratings (Ta=25℃)

4.1. Connector Material:
Housing:Thermoplastic UL94 V-0
Contact/Shield:Cooper alloy
Shield Plating:Nickel
Contact Plating:Selective gold 6u"; 15u"; 30u"; 50u"Min

4.2. Tolerances comply with F.C.C dimension requirements

4.3. Durability:800 mating Min

4.4. Meets or Exceeds IEEE802.3af standards including 350uH Min OCL @100KHz 100mV 8mA DC

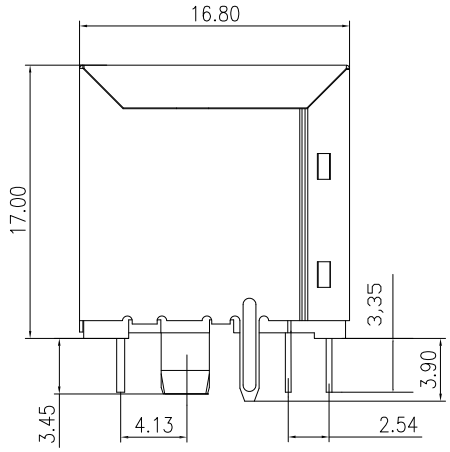

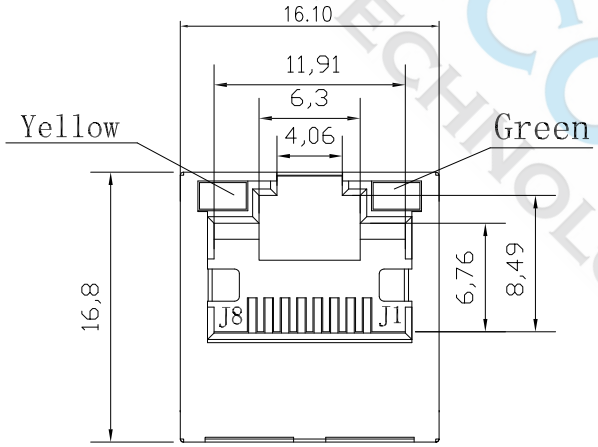

WISCONN TECHNOLOGY

DIMENSIONS TOLERANCE METRIC	UNITS	MM	FINISH	SEE NOTE	CH'K	Calvin	DRAW NAME RJ45 1x1 180度 10PIN 10/100 左黃右綠(4.13mm) H:17.0mm		WISCONN Technology Co.,Ltd					
Up to 5 ±0.2 Above 5~15 ±0.3 Above 15~30 ±0.4 Above 30~50 ±0.5 Angle ±0.3°	QT'Y	N/A	DRAW	Johnson	APP'D	Selena	PART NUMBER	WRJ-1104F2048-1	Tel:+886-2-2790-1979 Fax:+886-2-2790-1569					
	MT'L	SEE NOTE	DE'N	Mike	DATE	August . 12 . 2022	DRAW NUMBER	C006	SCALE 1/1	SIZE A4	SHEET 2	REV. A		
							FILE NAME .DWG							