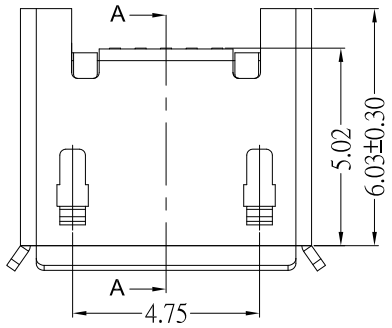

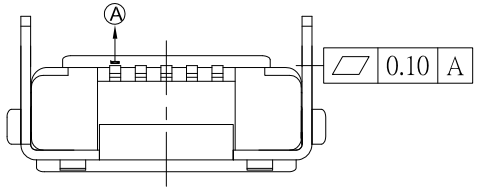

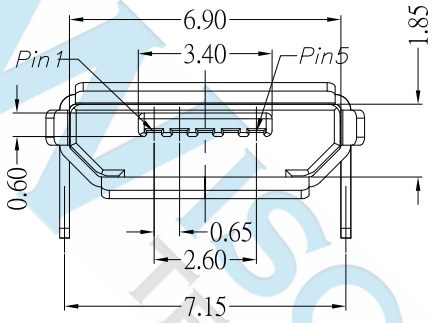

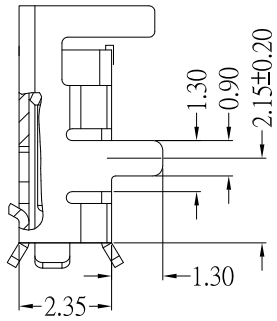

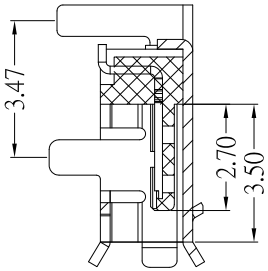

SECTION A-A

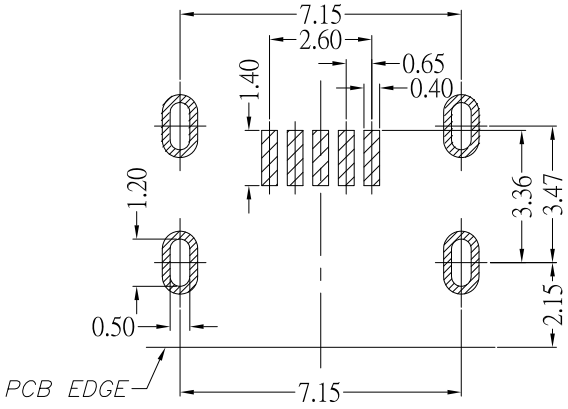

P.C.B LAYOUT MOUNTING PATTERN

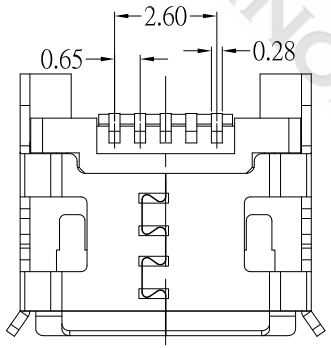

NOTES:

MATERIAL:

1.1 HOUSING: LCP

1.2 CONTACT: PHOSPHOR BRONZE

1.3 SHELL: BRASS

Finish:

2.1 Contact: PLATED GOLD IN MATING AREA ;
GOLD PLATED ON SOLDER BALLS
NICKEL UNDER PLATED OVERALL

3.SPECIFICATION:

3.1 CURRENT RATING: 1.8 A MAX(PIN1,5);
1.0 A MAX(PIN2,3,4)

3.2 DIELECTRIC WITHSSTANDING VOLTAGE: 100 V(ac) FOR 1min

3.3 CONTACT RESISTANCE: 30 mΩ MAX.

3.4 INSULATION RESISTANCE: 100 MΩ MIN.

3.5 TOTAL MATING FORCE: 3.57 Kgf MAX.

3.6 TOTAL UNMATING FORCE: 1.0 Kgf MIN.

3.7 TEMPERATURE RANGE: -30˚C ~ +80˚C

DIMENSIONS TOLERANCE METRIC								
Up to 5 ±0.2	UNITS	MM	FINISH	SEE NOTE	CH'K	Calvin	DRAW NAME MICRO USB B 90D 7.15mm 1.3mmX4	WISCONN Technology Co.,Ltd
Above 5~15 ±0.3	QT'Y	N/A	DRAW	Johnson	APP'D	Selena	PART NUMBER WMRU2-5-FxxR3D25	Tel:+886-2-2790-1979 Fax:+886-2-2790-1569
Above 15~30 ±0.4	MT'L	SEE NOTE	DE'N	Mike	DATE	APR.19.2018	DRAW NUMBER T002	SCALE 1/1 SIZE A4 SHEET 1 REV. A
Above 30~50 ±0.5							FILE NAME .DWG	
Angle ±0.3°								