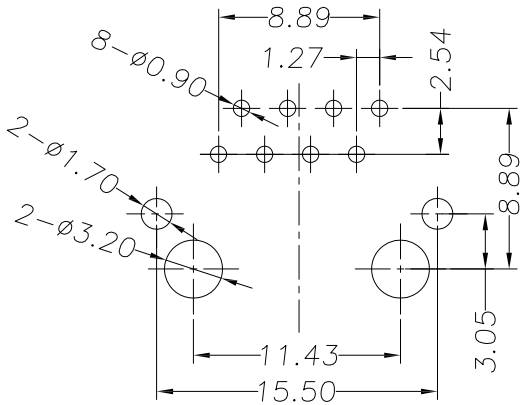

PC Board Layout

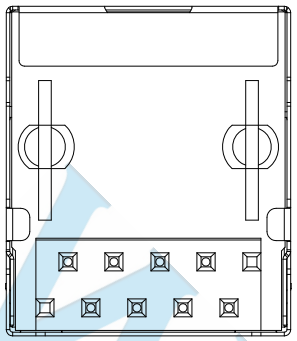

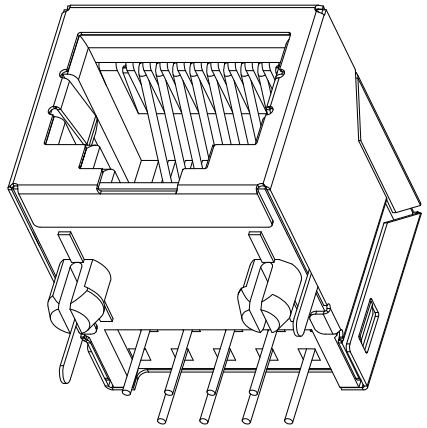

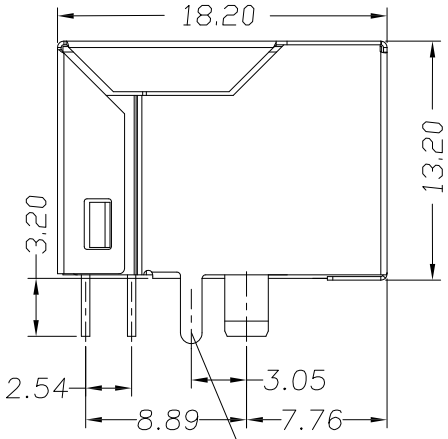

PEG/TAB

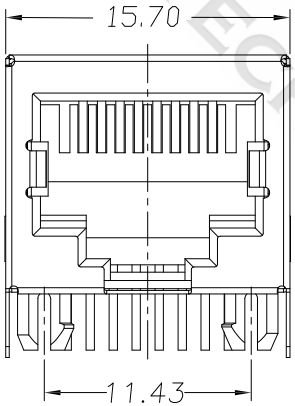

NOTES:

ELECTRICAL:

1. VOLTAGE RATING :125 VAC RMS.
2. CURRENT RATING : 1.5 AMP.
3. CONTACT RESISTANCE : 30 MILLIOHMSMAX
4. INSULATION RESISTANCE : 500 MEGOHMS MIN @ 500 NDC.
5. DIELECTRIC STRENGTH : 1000 VAC RMS 50Hz or 60Hz, 1MIN.

MECHANICAL:

1. HOUSING & INSERT MATERIAL : PBT UL94V-0.
2. CONTACT MATERIAL : DIAMETER0.45MM PHOSPHOR BRONZE GOLD PLATING OVER NICKEL.
3. SHIELD : 0.20~0.25MM THICKNESS BRASS WITH TIN PLATED.
4. MATING/UNMATING FORCE : 2.2KG.F MAX.
5. RETENTION STRENGTH : 7.7KG.F MIN BETWEEN JACK AND PLUG.
6. OPERATING LIFE : 750 CYCLES MIN.

ENVIRONMENTAL:

1. STORAGE : -40℃ ~+85℃ REATIVE HUMIDITY<70%
2. OPERATION : -40℃ ~+85℃

WISCONN TECHNOLOGY

DIMENSIONS TOLERANCE METRIC								
Up to 5 ±0.2	UNITS	MM	FINISH	SEE NOTE	CH'K	Calvin	DRAW NAME RJ45 LOW PROFILE H:13.2mm WO/LED&EMI BACK PEG3.05	WISCONN Technology Co.,Ltd
Above 05~15 ±0.3	QT'Y	N/A	DRAW	Johnson	APP'D	Selena	PART NUMBER WRJ5LP-108-11xxRAA1A5	Tel:+886-2-2790-1979 Fax:+886-2-2790-1569
Above 15~30 ±0.4	MT'L	SEE NOTE	DE'N	Mike	DATE	March . 18 . 2021	DRAW NUMBER C006	SCALE 1/1 SIZE A4 SHEET 1 REV. A
Above 30~50 ±0.5							FILE NAME .DWG	
Angle ±0.3°								