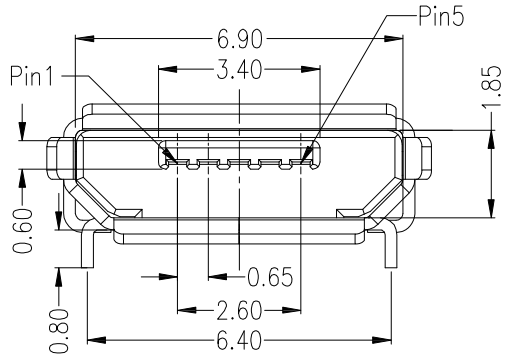

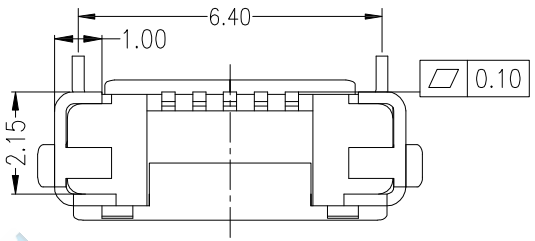

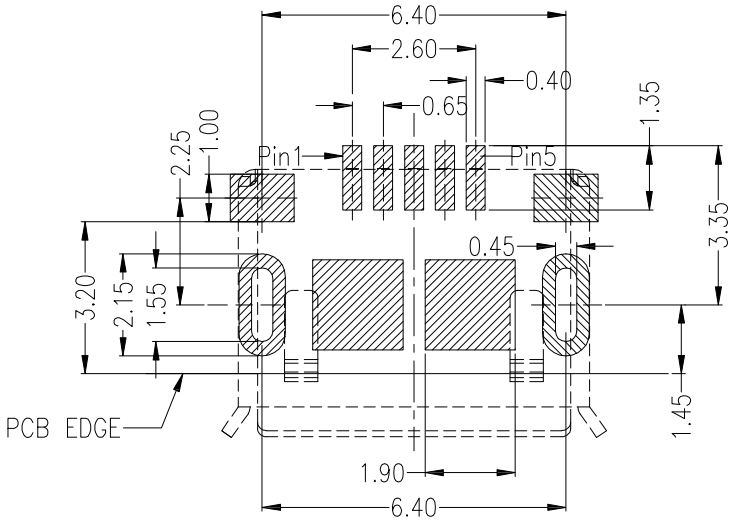

P.C.B LAYOUT MOUNTING PATTERN

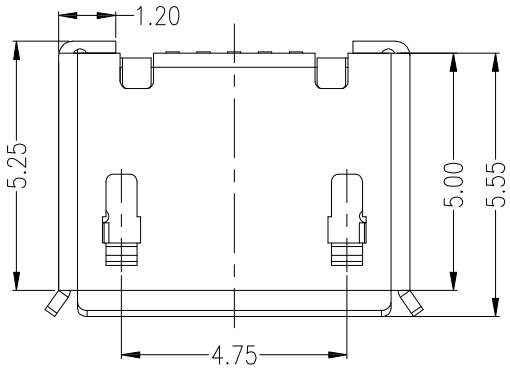

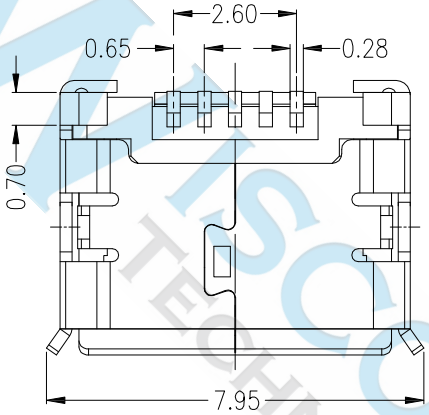

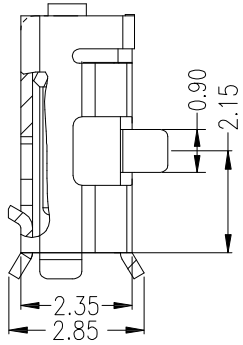

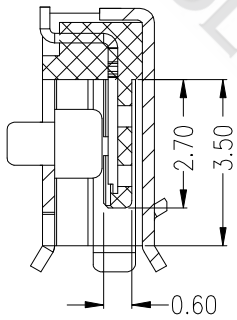

NOTES:

MATERIAL:

1.1 HOUSING: LCP

1.2 CONTACT: PHOSPHOR BRONZE

1.3 SHELL: BRASS

Finish:

2.1 Contact: Plated Gold in Mating Area ;

Gold Plated on Solder Balls

Nickel under plated overall

3.SPECIFICATION:

3.1 CURRENT RATING: PIN(1,5)1.8A MAX ; PIN(2,3,4)1.0 A MAX

3.2 DIELECTRIC WITHSSTANDING VOLTAGE: 100 V(ac) FOR 1min

3.3 CONTACT RESISTANCE: 30 mΩ MAX.

3.4 INSULATION RESISTANCE: 100 MΩ MIN.

3.5 TOTAL MATING FORCE: 3.57 Kgf MAX.

3.6 TOTAL UNMATING FORCE: 1.0 Kgf MIN.

3.7 TEMPERATURE RANGE: -30°C ~ +80°C

WISCONN TECHNOLOGY

DIMENSIONS TOLERANCE METRIC	UNITS	MM	FINISH	SEE NOTE	CH'K	Calvin	DRAW NAME MICRO USB2.0 B TYPE R/A SMT+DIP 6.4mm 後貼無柱		WISCONN Technology Co.,Ltd
Up to 5 ±0.2 Above 5~15 ±0.3 Above 15~30 ±0.4 Above 30~50 ±0.5 Angle ±0.3°	QT'Y	N/A	DRAW	Johnson	APP'D	Selena	PART NUMBER	WMRU2-5-xxMTR3D4	Tel:+886-2-2790-1979 Fax:+886-2-2790-1569
	MT'L	SEE NOTE	DE'N	Mike	DATE	September.12.2019	DRAW NUMBER	T002	SCALE 1/1 SIZE A4 SHEET 1 REV. A
							FILE NAME .DWG		