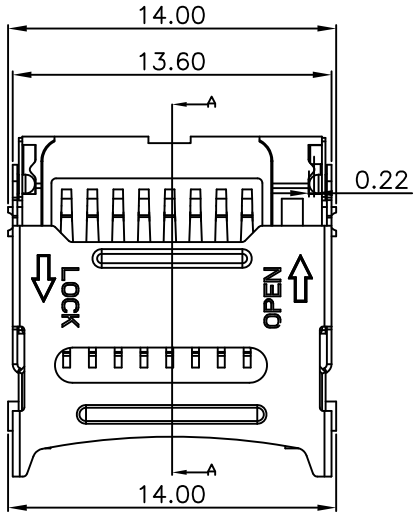

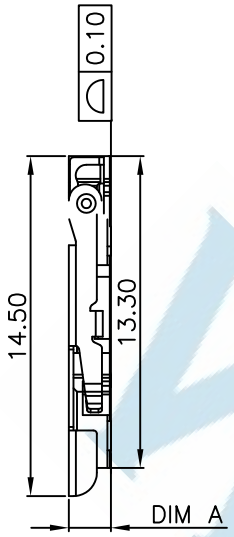

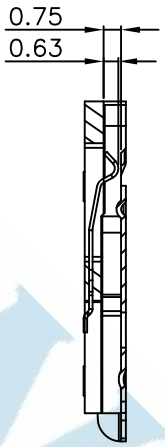

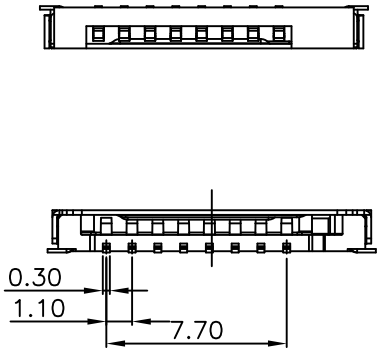

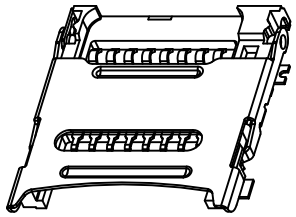

TABLE 1:

DIM A	P/N
1.80	1
1.60	2

TABLE 2:

PIN NO.	PIN Assignmeng.
PIN1	DAT2
PIN2	CD/DAT3
PIN3	CMD
PIN4	VDD
PIN5	CLK
PIN6	Uss2
PIN7	DAT0
PIN8	DAT1

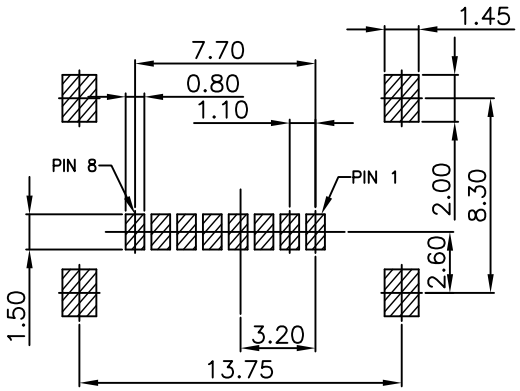

P.C.B LAYOUT

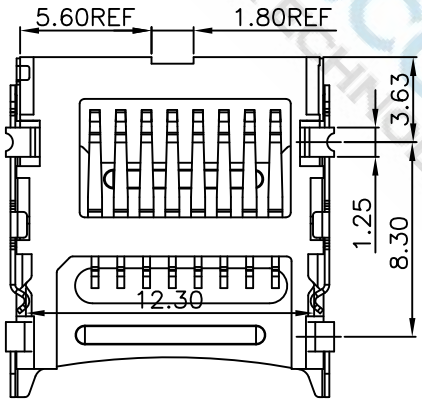

MATERIALS

HOUSING: HIGH-TEMP. PLASTIC (UL 94V-0), BLACK
SHELL: STAINLESS STEEL, NICKEL PLATING
TERMINAL: COPPER ALLOY, GOLD PLATED ON CONTACT AREA, TIN PLATING ON SOLDER TAIL

SPECIFICATION

CURRENT RATING: 0.5 AMP MAX
DIELECTRIC WITHSTANDING: 500V AC FOR ONE MINUTE
CONTACT RESISTANCE: 40m OHMS MAX
INSULATION RESISTANCE: 1000M OHMS MIN AT DC 500V
OPERATION TEMPERATURE: -20°C~+85°C

DIMENSIONS TOLERANCE METRIC .0=±0.30 .00=±0.20 .000=±0.10 ANG.=±2°	單位(UNITS)	MM	處理(FINISH)	SEE NOTE	審校(CH'K)	Calvin	圖名(NAME) MICRO SD(T-FLASH)PCB MOUNT SMT METAL SHIELD FEMALE NON PUSH-PUSH TYPE
	數量(QT'Y)	N/A	繪圖(DRAW)	Johnson	核准(APP'D)	Selena	料號(PART NUMBER) WMSD-08FHTBHSR-xx
	材料(MT'L)	SEE NOTE	設計(DE'N)	Mike	日期(DATE)	OCT.15.2007	圖號(DRAW NUMBER) T004
							圖檔(FILE NAME .DWG)

WISCONN Technology Co.,Ltd
Tel:02-2742-1798 Fax:02-2742-1898

比例(SCALE)	1/1	圖紙(SIZE)	A4	頁次(SHEET)	1	版次(REV.)	A

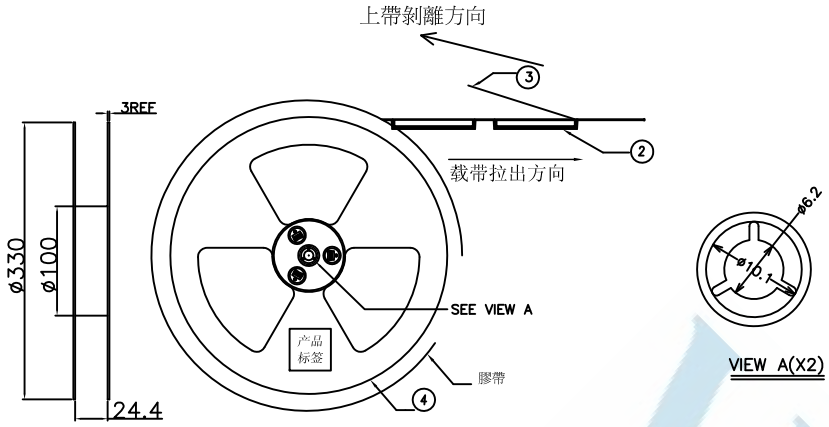

VIEW A(X2)

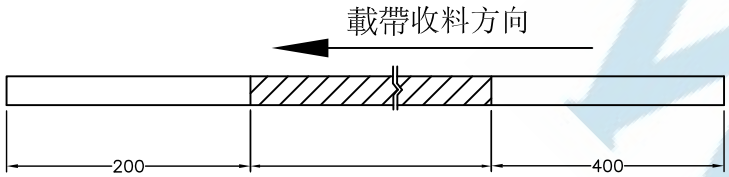

前端卷入空下帶200mm(約10格)　中間包裝產品1,000PCS　尾端卷入空下帶400mm(約20格)

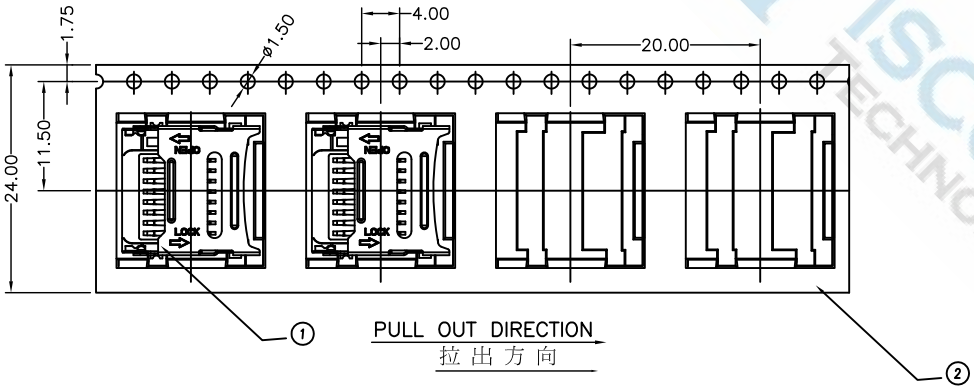

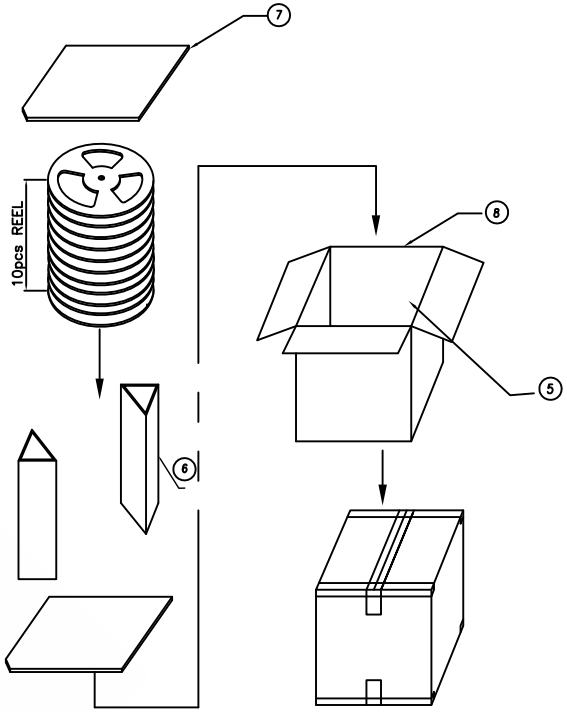

產品放置位置與方向如上圖所示(載帶有圓孔一邊朝上,產品正面朝上端子錫腳朝上),不可放反. 防止漏裝混裝,禁止碰歪產品錫腳.蓋帶熱封後表面平整無起皺偏斜脫離不良.

PACKING NOTES:

1. PRIMARY PACKING:1000PCS UNITS/REEL;
2. SECONDARY PACKING: 10REELS/CARTON (10000PCS /CARTON)
3. CARTON SIZE:350*350*335mm

DIMENSIONS TOLERANCE METRIC .0=±0.30 .00=±0.20 .000=±0.10 ANG.=±2°	單位(UNITS)	MM	處理(FINISH)	SEE NOTE	審校(CH'K)	Calvin	圖名(NAME) MICRO SD(T-FLASH)PCB MOUNT SMT METAL SHIELD FEMALE NON PUSH-PUSH TYPE		WISCONN Technology Co.,Ltd Tel:02-2742-1798 Fax:02-2742-1898					
	數量(QT'Y)	N/A	繪圖(DRAW)	Johnson	核准(APP'D)	Selena	料號(PART NUMBER)	WMSD-08FHTBHSR-xx						
	材料(MT'L)	SEE NOTE	設計(DE'N)	Mike	日期(DATE)	OCT.15.2007	圖號(DRAW NUMBER)	T004	比例(SCALE)	1/1	圖紙(SIZE)	A4	頁次(SHEET)	1	版次(REV.)	A
							圖檔(FILE NAME .DWG)							