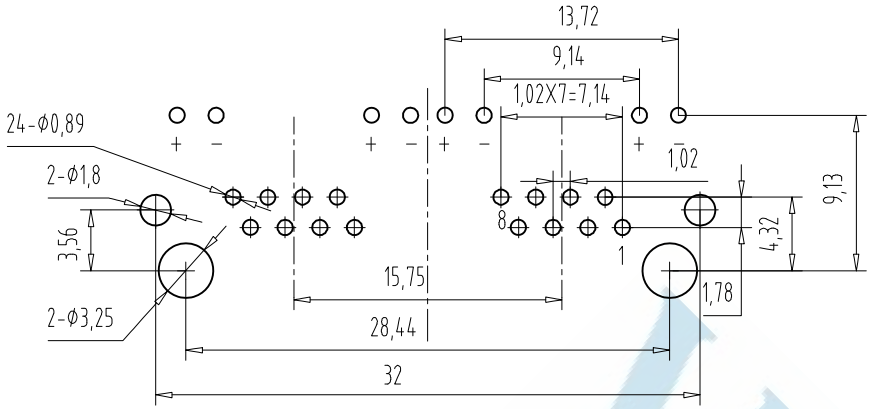


PC Board Layout

Component Side Shown

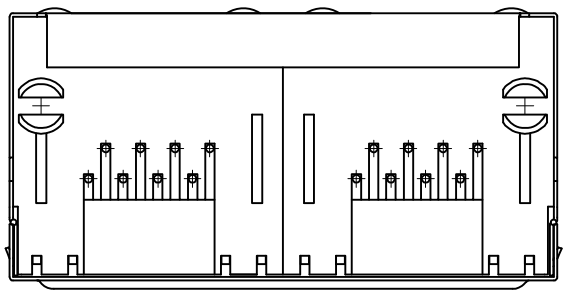

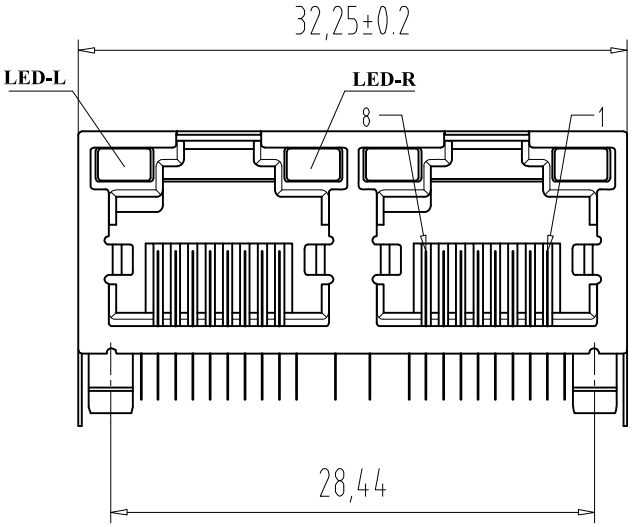


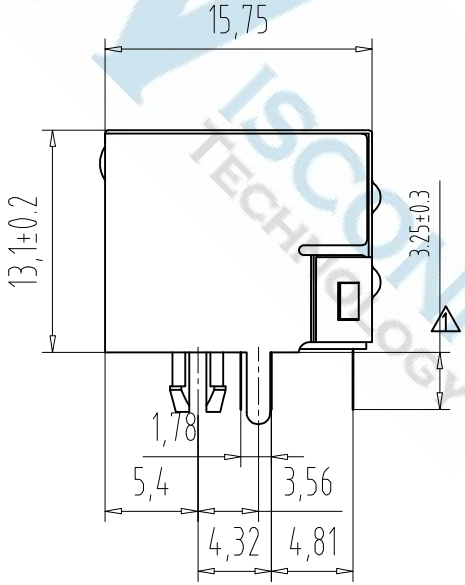


## NOTES:

### MATERIAL :

| | |
|---|---|
| 1.HOUSING MATERIAL | :GLASS FILLED POLYESTER UL94V-0. |
| 2.CONTACT MATERIAL | :PHOSPHOR BRONZE Φ0.46mm. |
| 3.PLATING | :GOLD PLATING OVER NICKEL. |
| 4.SHIELD | :0.2mm THICKNESS COPPER ALLOY WITH NICKEL PLATED. |
| 5.LED | :OPTION |

### ELECTRICAL:

| | |
|---|---|
| 1.VOLTAGE RATING | :125 VAC RMS. |
| 2.CURRENT RATING | :1.5 AMP. |
| 3.CONTACT RESISTANCE | :30 MILLIOHMS MAX. |
| 4.INSULATION RESISTANCE | :500 MEGOHMS MIN @ 500V DC . |
| 5.DIELECTRIC WITHSTANDING RESISTANCE | :1000V AC RMS 50Hz. 1MIN. |

### MECHANICAL:

| | |
|---|---|
| 1. DURRABILITY | :750 CYCLES MIN. |
| 2.PCB RETENTION PRE-SOLDER | :1 LB MIN. |

### ENVIRONMENTAL:

| | |
|---|---|
| 1. STORAGE | : -40℃~+85℃ |
| 2. OPERATION | : -40°C TO 70°C. |

| | | | | | | | | | | | | | |
|---|---|---|---|---|---|---|---|---|---|---|---|---|---|
| DIMENSIONS TOLERANCE METRIC .0=±0.30 .00=±0.20 .000=±0.10 ANG.=±2° | 單位(UNITS) | MM | 處理(FINISH) | SEE NOTE | 審校(CH'K) | Calvin | 圖名(NAME) RJ45 1X2 PORT w/LED wo/EMI | | WISCONN Technology Co.,Ltd Tel:02-2742-1798 Fax:02-2742-1898 | | | | |
| | 數量(QT'Y) | N/A | 繪圖(DRAW) | Johnson | 核准(APP'D) | Selena | 料號(PART NUMBER) | WRJ5-1X2XXPBDR-XX | | | | | |
| | 材料(MT'L) | SEE NOTE | 設計(DE'N) | Mike | 日期(DATE) | OCT.15.2007 | 圖號(DRAW NUMBER) | C004 | 比例(SCALE) 1/1 | 圖紙(SIZE) A4 | 頁次(SHEET) 1 | 版次(REV.) A | |
| | | | | | | | 圖檔(FILE NAME .DWG) | | | | | | |