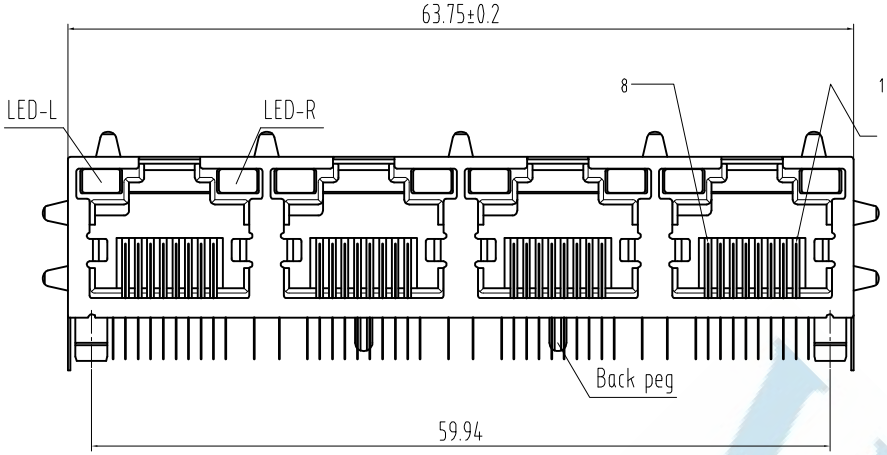

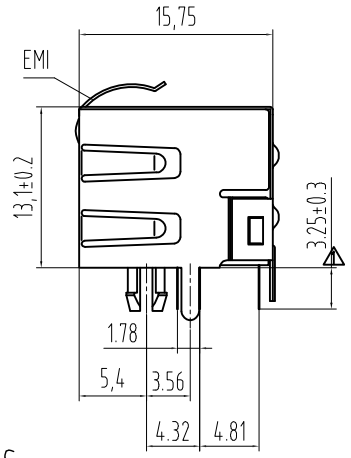

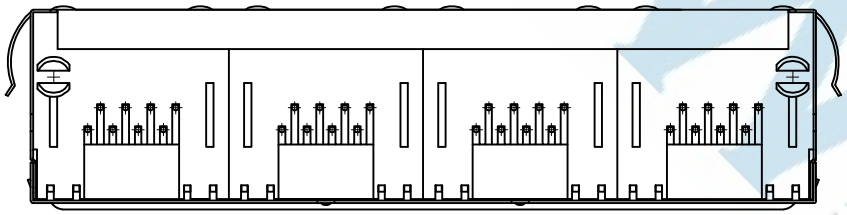

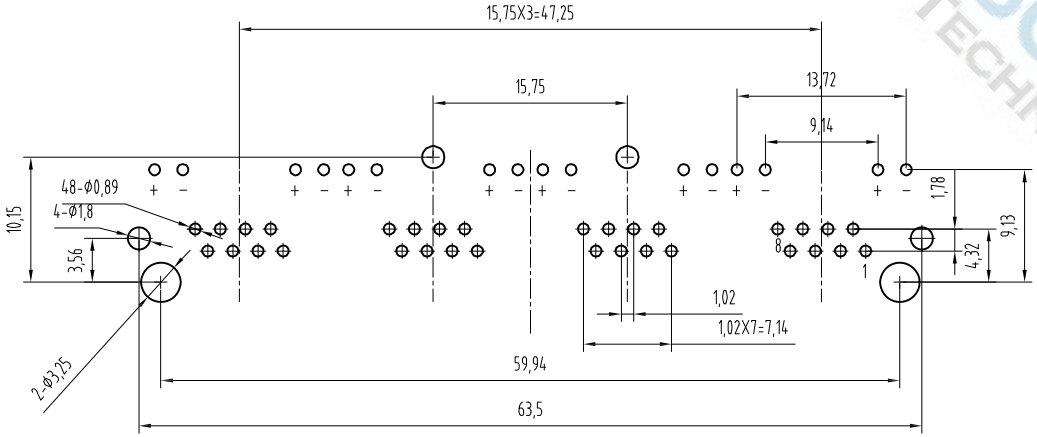

NOTES:

MATERIAL :

1.HOUSING MATERIAL	:GLASS FILLED POLYESTER UL94V-0.
2.CONTACT MATERIAL	:PHOSPHOR BRONZE Φ0.46mm.
3.PLATING	:GOLD PLATING OVER NICKEL.
4.SHIELD	:0.2mm THICKNESS COPPER ALLOY WITH NICKEL PLATED.
5.LED	:OPTION

ELECTRICAL:

1.VOLTAGE RATING	:125 VAC RMS.
2.CURRENT RATING	:1.5 AMP.
3.CONTACT RESISTANCE	:30 MILLIOHMS MAX.
4.INSULATION RESISTANCE	:500 MEGOHMS MIN @ 500V DC .
5.DIELECTRIC WITHSTANDING RESISTANCE	:1000V AC RMS 50Hz. 1MIN.

MECHANICAL:

1. DURRABILITY	:750 CYCLES MIN.
2.PCB RETENTION PRE-SOLDER	:1 LB MIN.

ENVIRONMENTAL:

1. STORAGE	: -40℃~+85℃
2. OPERATION	: -40°C TO 70°C.

DIMENSIONS TOLERANCE METRIC .0=±0.30 .00=±0.20 .000=±0.10 ANG.=±2°	單位(UNITS)	MM	處理(FINISH)	SEE NOTE	審校(CH'K)	Calvin	圖名(NAME) RJ45 8P8C JACK 1x4 PORT DIP(R/A), W/SHELL(3.56), W/LED		WISCONN Technology Co.,Ltd Tel:02-2742-1798- Fax:02-2742-1898					
	數量(QT'Y)	N/A	繪圖(DRAW)	Johnson	核准(APP'D)	Selena	料號(PART NUMBER)	WRJ5S-1X4XXPBDR-XX						
	材料(MT'L)	SEE NOTE	設計(DE'N)	Mike	日期(DATE)	OCT.15.2007	圖號(DRAW NUMBER)	C004	比例(SCALE)	1/1	圖紙(SIZE)	A4	頁次(SHEET)	1	版次(REV.)	A
							圖檔(FILE NAME .DWG)							