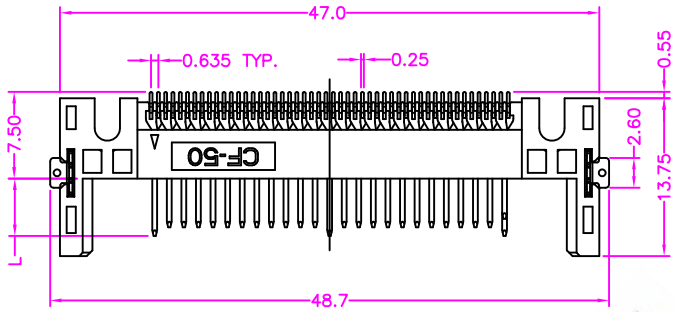

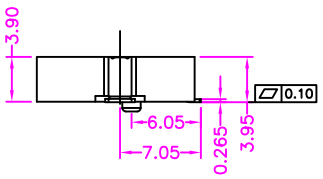

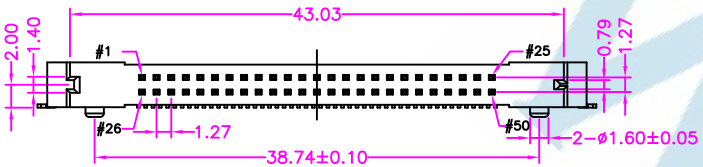

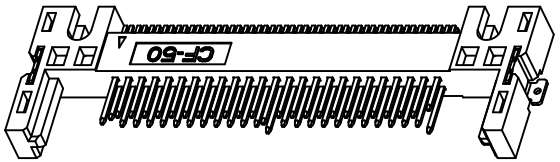

PIN TYPE	DIM "L"	PIN NO.
DETECT	3.50MM	25, 26
GENERAL	4.25MM	ALL OTHER PINS
POWER	5.00MM	1, 13, 38, 50

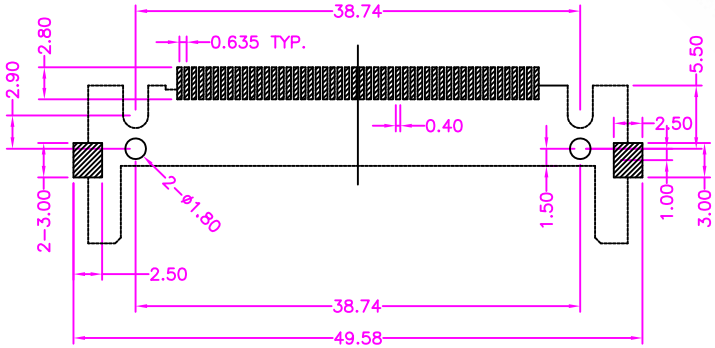

P.C.B LAYOUT
TOP VIEW ±0.05

MATERIALS

HOUSING: HI-TEMP PLASTIC (UL 94V-0)
TERMINAL: COPPER ALLOY, GOLD PLATED ON CONTACT AREA
TIN PLATING ON SOLDER TAIL

SPECIFICATION

CURRENT RATING: 0.5 AMP MAX
DIELECTRIC WITHSTANDING: 500V AC FOR ONE MINUTE
INSULATION RESISTANCE: 1000M OHMS MIN AT DC 500V
OPERATION TEMPERATURE: -40°C~+85°C

DIMENSIONS TOLERANCE METRIC .0=±0.30 .00=±0.20 .000=±0.10 ANG.=±2°	單位(UNITS)	MM	處理(FINISH)	SEE NOTE	審校(CH'K)	Calvin	圖名(NAME) CF CARD PCB MOUNT SMT MALE (REACH=13.75mm)		WISCONN Technology Co.,Ltd Tel:02-2742-1798 Fax:02-2742-1898					
	數量(QT'Y)	N/A	繪圖(DRAW)	Johnson	核准(APP'D)	Selena	料號(PART NUMBER)	WCFC-50GFHTSR-13.75						
	材料(MT'L)	SEE NOTE	設計(DE'N)	Mike	日期(DATE)	OCT.15.2007	圖號(DRAW NUMBER)	T004	比例(SCALE)	1/1	圖紙(SIZE)	A4	頁次(SHEET) 1	版次(REV.) A
							圖檔(FILE NAME .DWG)							