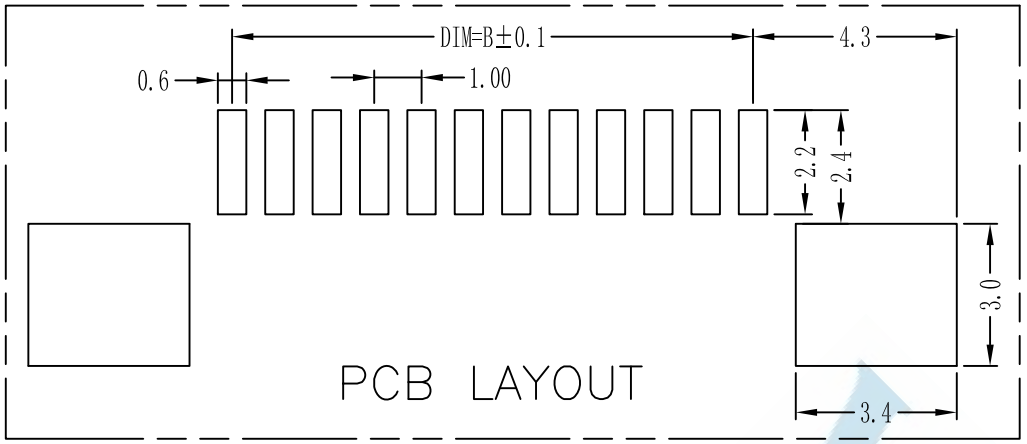

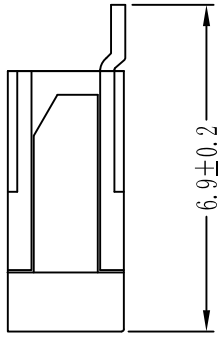

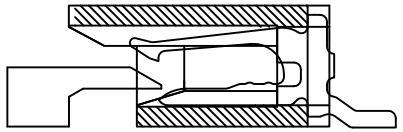

上接觸 A: ABOVE

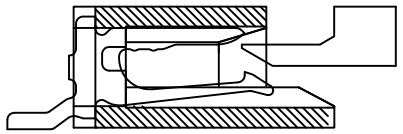

下接觸 D: DOWN

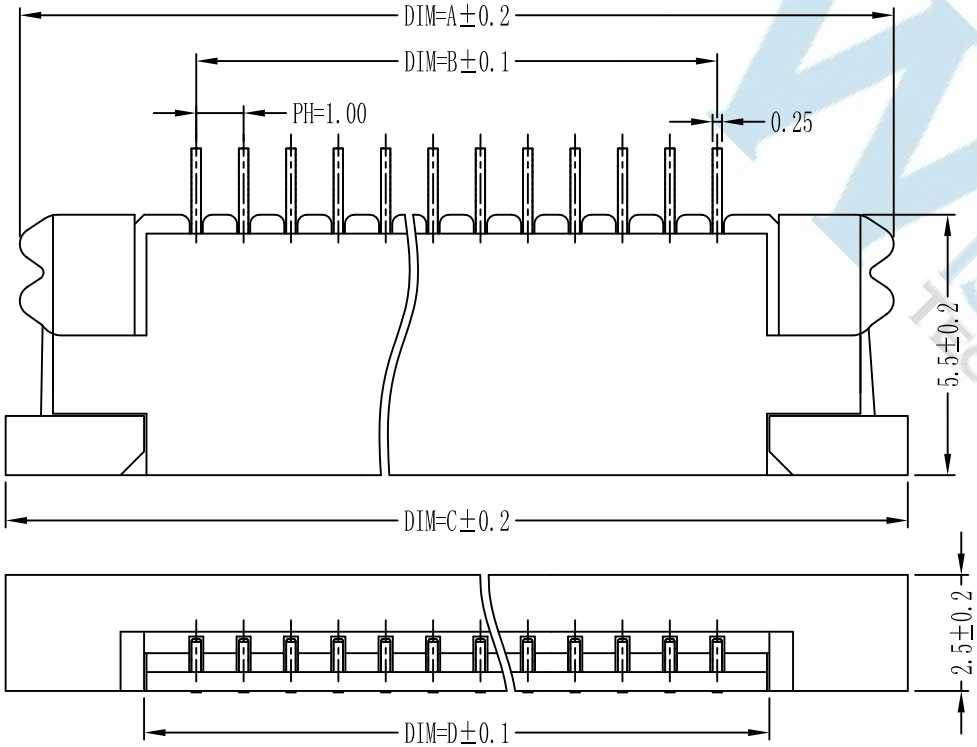

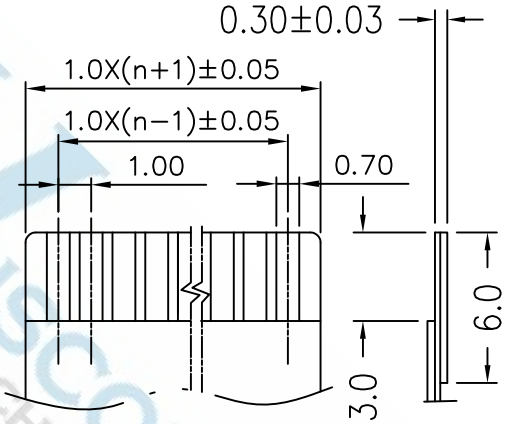

FFC CABLE

Electrical Characteristics:
Current rating: 0.4A AC/DC
Voltage rating: 50V AC/DC
Temperature range: −25°C~+85°C
Withstand Voltage: 200V AC/Minute
Contact Resistance: ≤ 20mΩ
Insulation resistance: ⩾500MΩ
Relative Humidity: 93%+40°C

Material Description:
Contact: Phosphor Bronze
Solder Tab: Phosphor Bronze
Housing: LCP (UL94V−0)
Slider: LCP (UL94V−0)

PIN NO.	DIM. A	DIM. B	DIM. C	DIM. D
4~N~30	N+6.5	N−1.0	N+7.0	N+1.1

ORDER INFORMATION

WF10K3 — D — XX — P — T

SERIES NO.

CONTACT TYPE.
A: ABOVE
D: DOWN

PIN No.

CONTACT PLATING
P: Pure Tin
G1: 1u Gold
...

PACKAGE
T: Tube
R: Tape/Reel

DIMENSIONS TOLERANCE METRIC .0=±0.30 .00=±0.20 .000=±0.10 ANG.=±2°	單位(UNITS)	MM	處理(FINISH)	SEE NOTE	審核(CH'K)	Calvin
	數量(QT'Y)	N/A	繪圖(DRAW)	Johnson	核准(APP'D)	Selena
	材料(MT'L)	SEE NOTE	設計(DE'N)	Mike	日期(DATE)	OCT.15.2007

圖名(NAME) FPC 1.0 H:2.5mm 上下接共用圖 銲片加寬

料號(PART NUMBER): WF10K3-X-XX-P-T

圖號(DRAW NUMBER): T001

圖檔(FILE NAME .DWG):

WISCONN Technology Co.,Ltd
Tel:02-2742-1798 Fax:02-2742-1898

比例 (SCALE)	1/1	圖紙 (SIZE)	A4	頁次 (SHEET)	1	版次 (REV.)	A