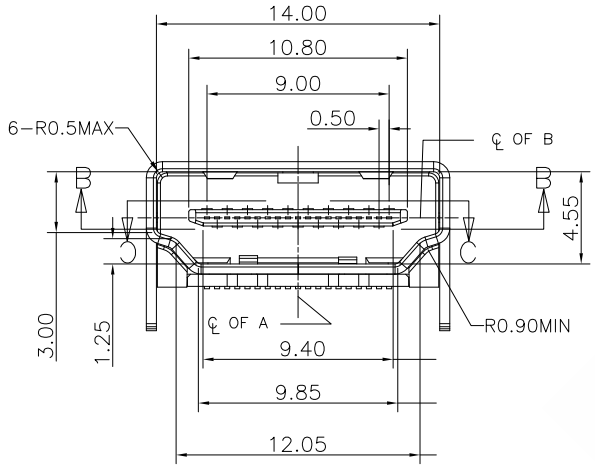

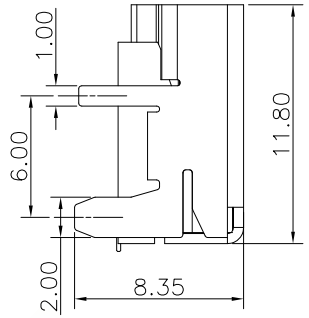

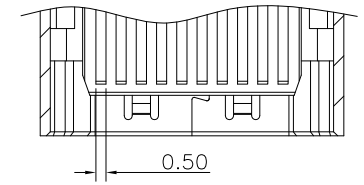

SEC C-C
SCALE 1:1

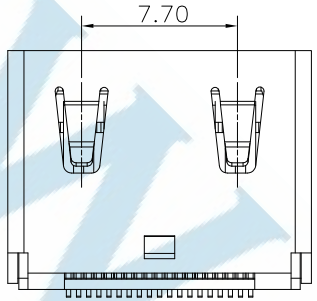

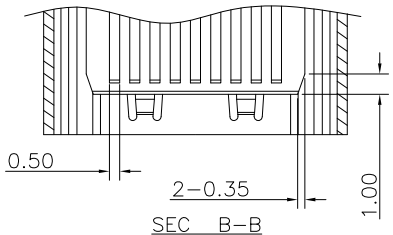

SEC B-B
SCALE 1:1

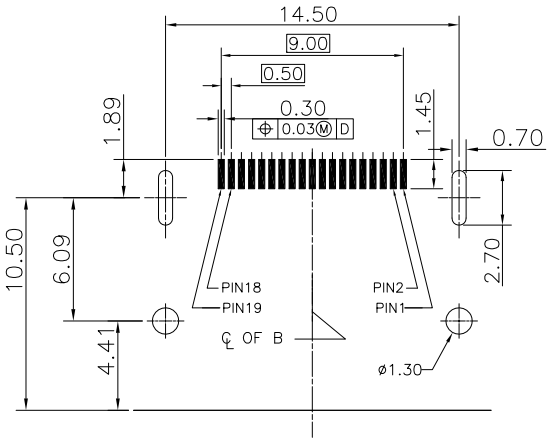

PCB Layout

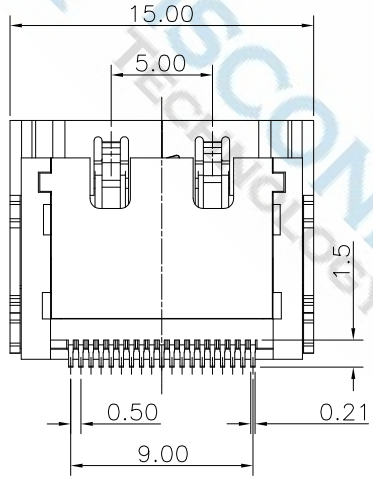

NOTE:

1. MATERIAL:
   a. HOUSING:LCP
   b. CONTACT:PHOSPHOR BRONZE
   c. SHEEL: BRASS
2. PLATING :
   a. CONTACT: Gold PLATING ON THE CONTACT AREA;
      TIN PLATING ON THE SOLDER AREA;
      NICKEL UNDERPLATING OVERALL;
      ☐ 1: PLATED Gold Flash (1~3u")
      ☐ 3: 15u"
      ☐ 4: 30u"
   b. SHELL: NICKEL PLATING OVERALL;
3. ELECTRICAL:
   a. DIELECTRIC WITHSTANDING VOLTAGE:
      AC 300V / 0.5mA / 60s ;
   b. INSULATION RESISTANCE: DC 500V / 100MΩ MIN;
   c. CONTACT RESISTANCE: 30 mΩ MAX;
   f. OPERATING TEMPERATURE: -20°C~ 85°C
3. MECHANICAL:
   a. INSERTION FORCE: 4.5KGF MAX;
   b. WITHDRAWAL FORCE: 0.7KGF MIN;

DIMENSIONS TOLERANCE METRIC .0=±0.30 .00=±0.20 .000=±0.10 ANG.=±2°	單位(UNITS)	MM	處理(FINISH)	SEE NOTE	審校(CH'K)	Calvin	圖名(NAME) HDMI 19P Female SMT TYPE		WISCONN Technology Co.,Ltd Tel:02-2742-1798 Fax:02-2742-1898					
	數量(QT'Y)	N/A	繪圖(DRAW)	Johnson	核准(APP'D)	Selena	料號(PART NUMBER)	WHDM-19FLBSDR						
	材料(MT'L)	SEE NOTE	設計(DE'N)	Mike	日期(DATE)	OCT.15.2007	圖號(DRAW NUMBER)	T002	比例(SCALE)	1/1	圖紙(SIZE)	A4	頁次(SHEET)	1	版次(REV.)	A
							圖檔(FILE NAME .DWG)							