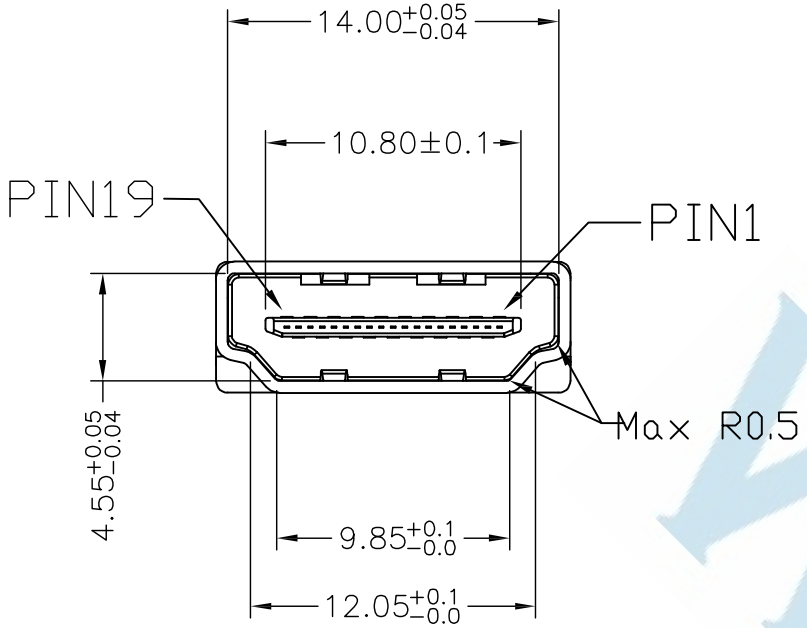

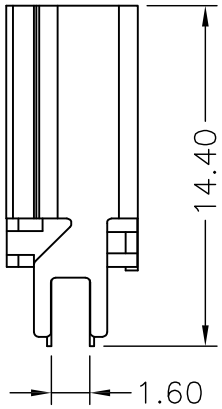

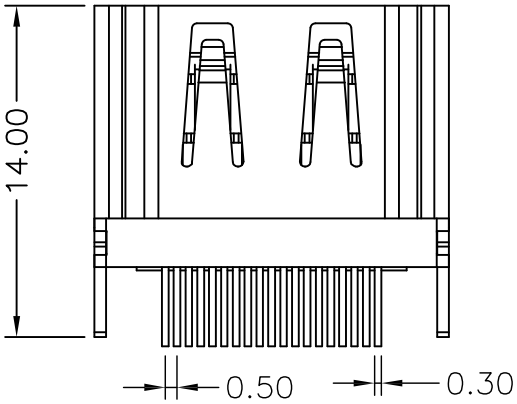

MATERIALS

HOUSING: HI-TEMP. PLASTIC (UL 94V-0)
SHELL: COPPER AOLLY, NICKEL PLATING
TERMINAL: COPPER AOLLY, GOLD PLATED ON
CONTACT AREA TIN PLATING ON SOLDER TAIL

SPECIFICATION

CURRENT RATING: 0.5 AMP MAX
DIELECTRIC WITHSTANDING: 500V AC FOR ONE MINUTE
CONTACT RESISTANCE: 30m OHMS MAX
INSULATION RESISTANCE: 1000M OHMS MIN AT DC 500V
OPERATION TEMPERATURE: −20°C~+85°C

WISCONN TECHNOLOGY

DIMENSIONS TOLERANCE METRIC .0=±0.30 .00=±0.20 .000=±0.10 ANG.=±2°	單位(UNITS)	MM	處理(FINISH)	SEE NOTE	審校(CH'K)	Calvin	圖名(NAME) HDMI 19P Female 夾板式		WISCONN Technology Co.,Ltd Tel:02-2742-1798 Fax:02-2742-1898					
	數量(QT'Y)	N/A	繪圖(DRAW)	Johnson	核准(APP'D)	Selena	料號(PART NUMBER)	WHDM-19FLBSTRD						
	材料(MT'L)	SEE NOTE	設計(DE'N)	Mike	日期(DATE)	OCT.15.2007	圖號(DRAW NUMBER)	T004	比例(SCALE)	1/1	圖紙(SIZE)	A4	頁次(SHEET)	1	版次(REV.)	A
							圖檔(FILE NAME .DWG)							