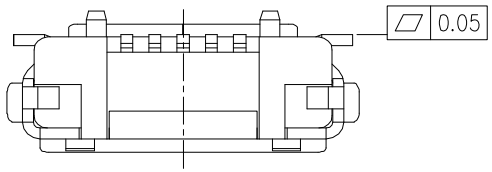

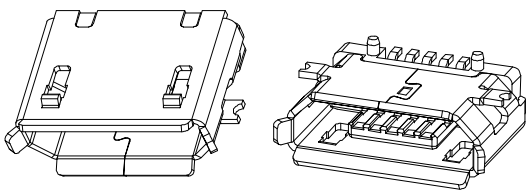

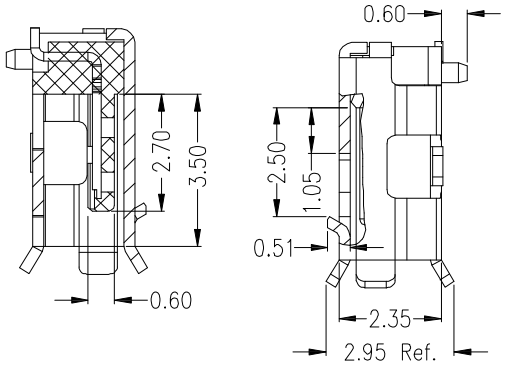

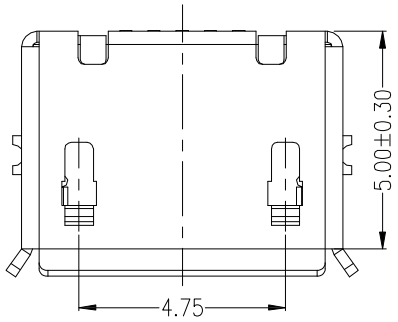

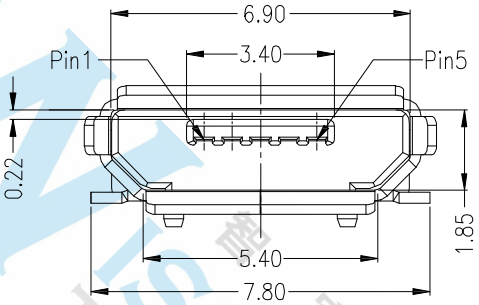

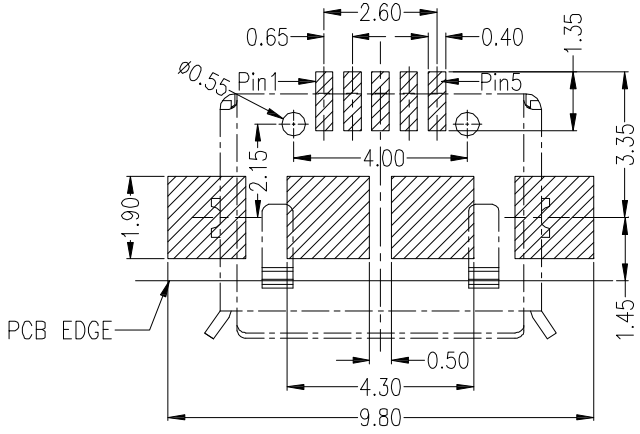

P.C.B LAYOUT MOUNTING PATTERN

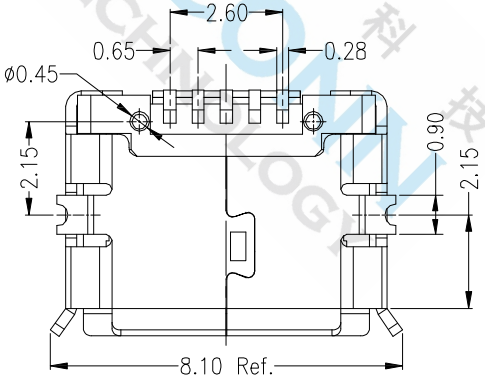

NOTES:

MATERIAL:

1.1 HOUSING: LCP,UL94V-0

1.2 CONTACT: BRASS

1.3 SHELL: BRASS

Finish:

2.1 Contact: Plated Gold in Mating Area ;
Gold Plated on Solder Balls
Nickel under plated overall

2.2 Shell: Nickel or Tin under Plated surface layer

3.SPECIFICATION:

3.1 CURRENT RATING: 1.8 A MAX(PIN1,5) ; 1.0 A MAX(PIN2,3,4)

3.2 DIELECTRIC WITHSSTANDING VOLTAGE:
100 V(ac) FOR 1min

3.3 CONTACT RESISTANCE: 30 mΩ MAX.

3.4 INSULATION RESISTANCE: 100 MΩ MIN.

3.5 TOTAL MATING FORCE: 3.57 Kgf MAX.

3.6 TOTAL UNMATING FORCE: 1.0 Kgf MIN.

3.7 TEMPERATURE RANGE: -30°C ~ +80°C

DIMENSIONS TOLERANCE METRIC .0=±0.30 .00=±0.20 .000=±0.10 ANG.=±2°	單位(UNITS)	MM	處理(FINISH)	SEE NOTE	審校(CH'K)	Calvin	圖名(NAME) MICRO USB B TYPE 5P Female SMT 4.0		WISCONN Technology Co.,Ltd Tel:02-2790-1979 Fax:02-2790-1569				
	數量(QT'Y)	N/A	繪圖(DRAW)	Johnson	核准(APP'D)	Selena	料號(PART NUMBER)	WMRU2-05FLBSR-4.0					
	材料(MT'L)	SEE NOTE	設計(DE'N)	Mike	日期(DATE)	NOV.03.2016	圖號(DRAW NUMBER)	T002	比例(SCALE)	1/1	圖紙(SIZE)	A4	頁次(SHEET) 1	版次(REV.) A
							圖檔(FILE NAME .DWG)						