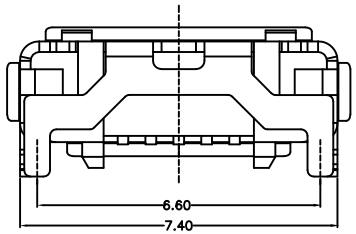

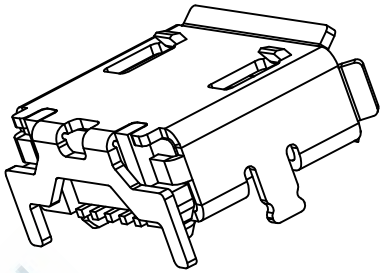

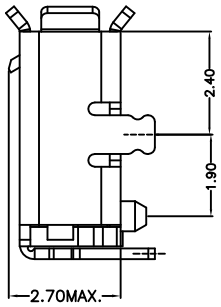

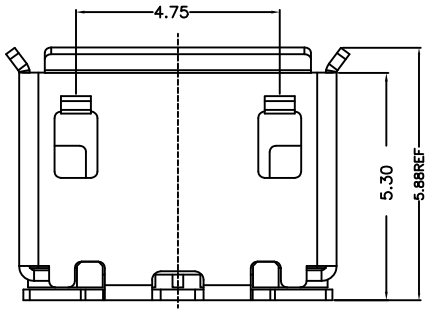

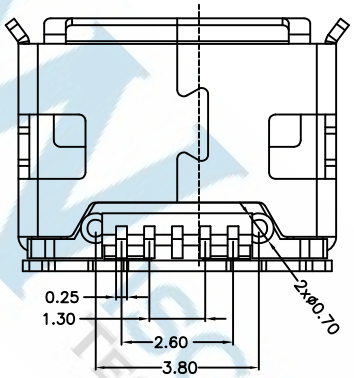

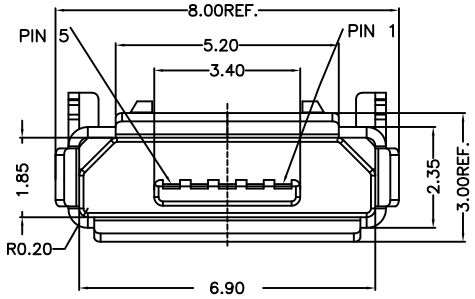

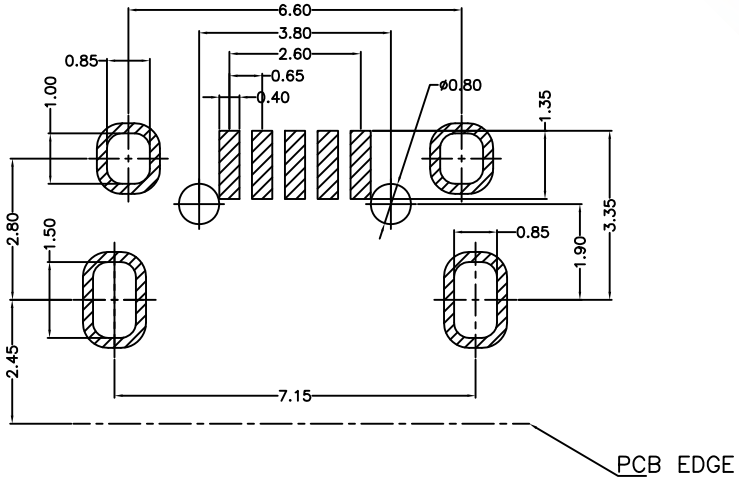

RECOMMENDED PCB LAYOUT(TOP VIEW)

SPECIFICATION:
1.MATING FORCE : 35N MAX.
2.UNMATING FORCE : 10N MIN, AFTER 10,000 CYCLES.
3.DURABILITY : 10,000 CYCLES MIN.
4.CURRENT : 1.0A
5.WITHSTANDING VOLTAGE : 100V AC.
6.CONTACT RESISTANCE : 30mΩ MAX INITIAL;
40mΩ MAX AFTER 10,000 CYCLES.
7.INSULATION RESISTANCE : 100MΩ MIN.
8.OPERATING TEMPERATURE RANGE -30°C~+80°C

DIMENSIONS TOLERANCE METRIC .0=±0.30 .00=±0.20 .000=±0.10 ANG.=±2°	單位(UNITS)	MM	處理(FINISH)	SEE NOTE	審校(CH'K)	Calvin	圖名(NAME) MICRO USB AB TYPE DIP R/A		WISCONN Technology Co.,Ltd Tel:02-2742-1798 Fax:02-2742-1898					
	數量(QT'Y)	N/A	繪圖(DRAW)	Johnson	核准(APP'D)	Selena	料號(PART NUMBER)	WMRU2AB-05GFLBDSR						
	材料(MT'L)	SEE NOTE	設計(DE'N)	Mike	日期(DATE)	OCT.15.2007	圖號(DRAW NUMBER)	T002	比例(SCALE)	1/1	圖紙(SIZE)	A4	頁次(SHEET)	1	版次(REV.)	A
							圖檔(FILE NAME .DWG)							