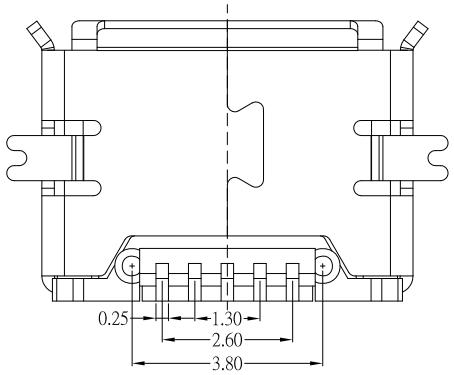

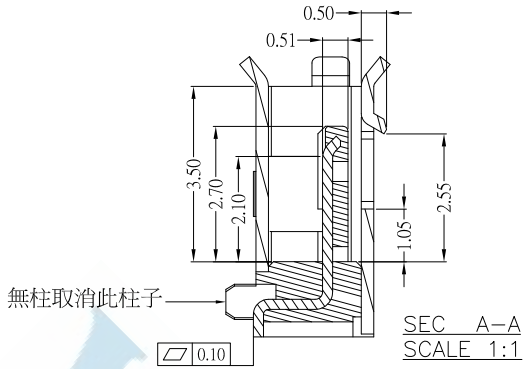

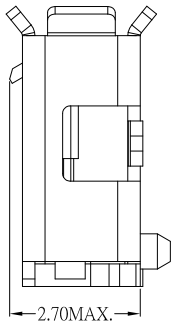

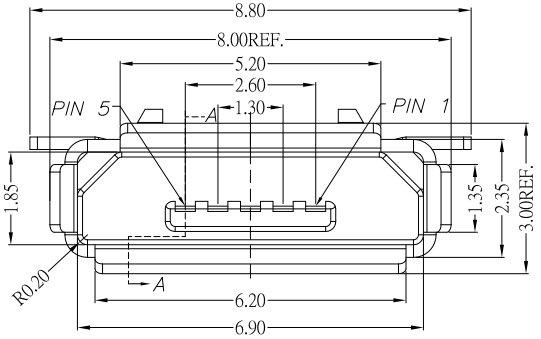

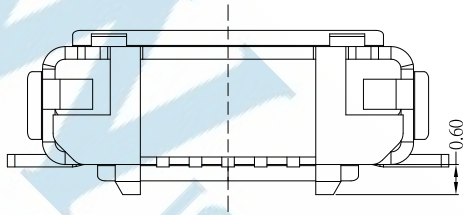

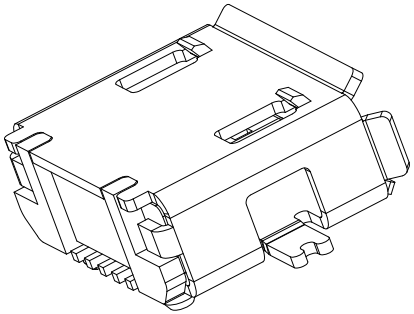

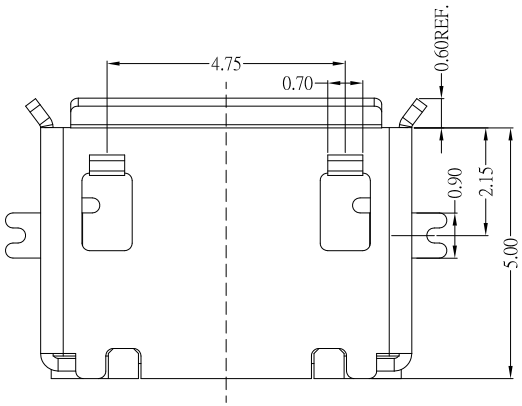

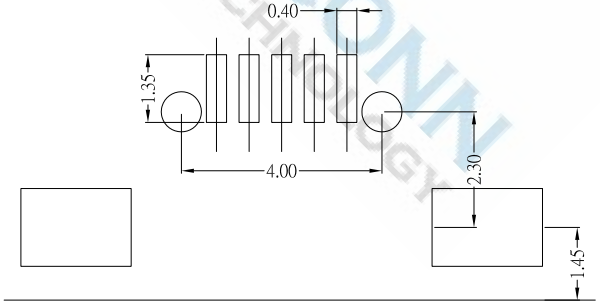

PCB LAYOUT

NOTE:
1.MATERIAL:
a.HOUSING:LCP
b.CONTACT:PHOSPHOR BRONZE
c.SHEEL: BRASS
2.PLATING :
a.CONTACT: PLATING ON THE CONTACT AREA;
TIN PLATING ON THE SOLDER AREA;
NICKEL UNDERPLATING OVERALL;
b.SHELL: NICKEL PLATING OVERALL;
3.ELECTRICAL:
a.DIELECTRIC WITHSTANDING VOLTAGE:
AC 30V / 1A
b.INSULATION RESISTANCE: DC 500V / 100MΩ MIN;
c.CONTACT RESISTANCE: 30 mΩ MAX;
f.OPERATING TEMPERATURE: -30˚C~ 85˚C
3.MECHANICAL:
a.INSERTION FORCE: 35N MAX;
b.WITHDRAWAL FORCE: 10N MIN;INITIAL 8-20N AFTER
10,000 CYCLES

DIMENSIONS TOLERANCE METRIC .0=±0.30 .00=±0.20 .000=±0.10 ANG.=±2°	單位(UNITS)	MM	處理(FINISH)	SEE NOTE	審校(CH'K)	Calvin	圖名(NAME) MICRO USB AB TYPE SMT R/A		WISCONN Technology Co.,Ltd Tel:02-2742-1798 Fax:02-2742-1898				
	數量(QT'Y)	N/A	繪圖(DRAW)	Johnson	核准(APP'D)	Selena	料號(PART NUMBER)	WMRU2AB-05GFLBSR					
	材料(MT'L)	SEE NOTE	設計(DE'N)	Mike	日期(DATE)	OCT.15.2007	圖號(DRAW NUMBER) 圖檔(FILE NAME .DWG)	T002	比例(SCALE) 1/1	圖紙(SIZE) A4	頁次(SHEET) 1	版次(REV.) A	