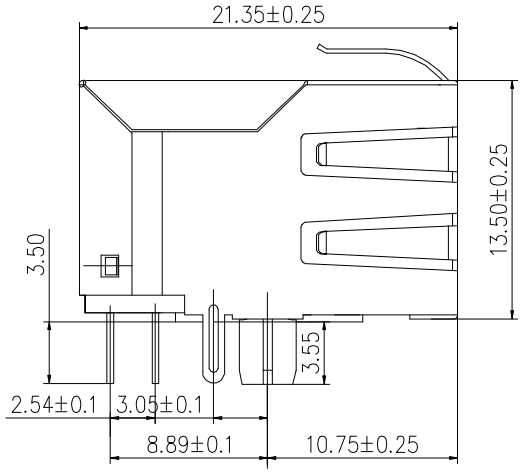


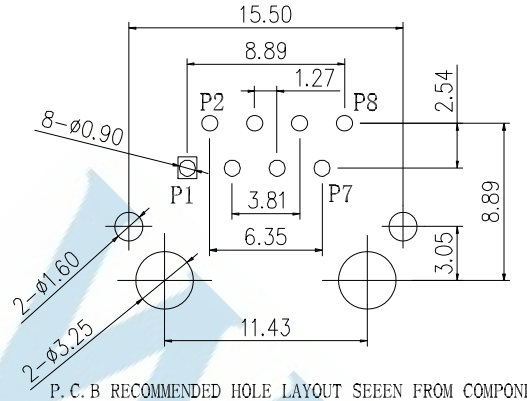


P.C.B RECOMMENDED HOLE LAYOUT SEEEN FROM COMPONENT SIDE.

ALL CENTERLINE DIMENSIONS ARE BASIC

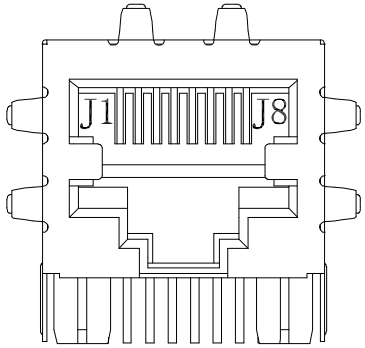


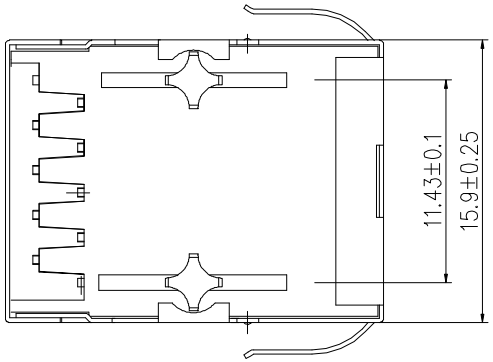


4.1. Connector Material:
Houising:Thermoplastic UL94 V-0
Contact/Shield:Cooper alloy
Shield Plating:Nickel
Contact Plating:Selective gold 6u"; 15u"; 30u"; 50u"Min

4.2. Tolerances comply with F.C.C dimension requirements

4.3. Durability:800 mating Min

| | | | | | | | | | | | | | | |
|---|---|---|---|---|---|---|---|---|---|---|---|---|---|---|
| DIMENSIONS TOLERANCE METRIC .0=±0.30 .00=±0.20 .000=±0.10 ANG.=±2° | 單位(UNITS) | MM | 處理(FINISH) | SEE NOTE | 審校(CH'K) | Calvin | 圖名(NAME) RJ45 1x1 With 10/100 Base-T Tab Down W/EMI L:21.35 3.05mm | | WISCONN Technology Co.,Ltd Tel:02-2790-1979 Fax:02-2790-1569 | | | | | |
| | 數量(QT'Y) | N/A | 繪圖(DRAW) | Johnson | 核准(APP'D) | Selena | 料號(PART NUMBER) | WRJ-1104B1009-1 | | | | | | |
| | 材料(MT'L) | SEE NOTE | 設計(DE'N) | Mike | 日期(DATE) | DEC.04.2015 | 圖號(DRAW NUMBER) | C006 | 比例(SCALE) | 1/1 | 圖紙(SIZE) | A4 | 頁次(SHEET) | 1 | 版次(REV.) | A |
| | | | | | | | 圖檔(FILE NAME .DWG) | | | | | | | |

## 3. Schematics:

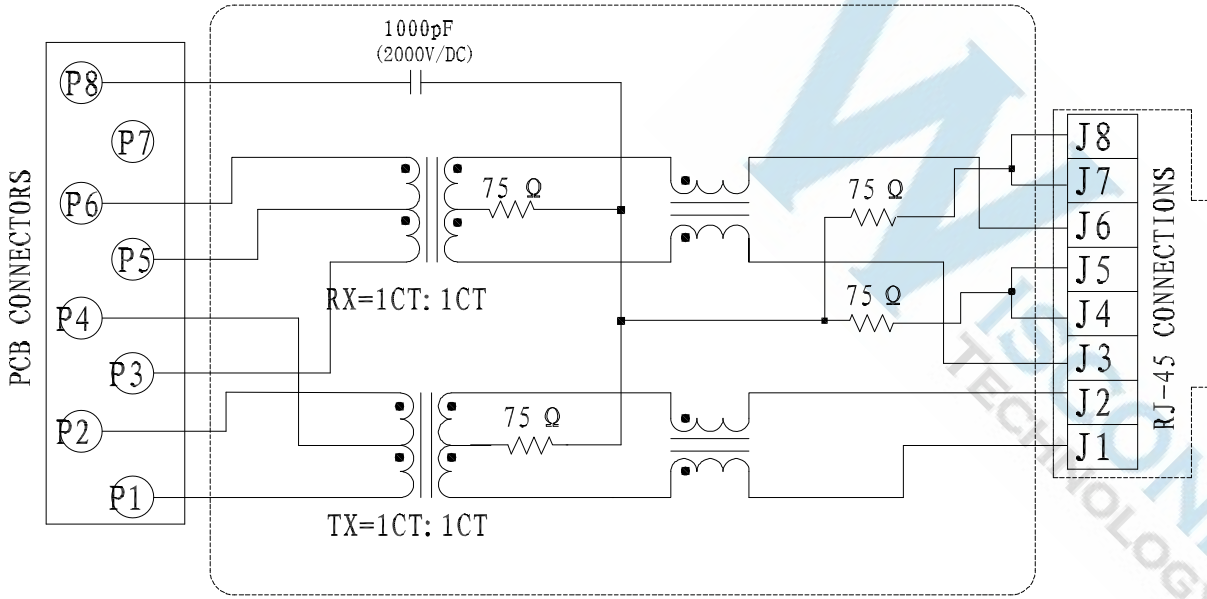


## 1. Electrical Specifications:@25℃

1.1. Isolation Voltage: 1500V/AC(Input to Output)

1.2. OCL:350uH Minimum @100KHz 100mV 8mA DC

1.3. Instertion Loss: -1.2dB Maximum @100KHz-100MHz

1.4. Return Loss: -18dB Minimum @1MHz-30MHz
-14dB Minimum @30MHz-60MHz
-12dB Minimum @60MHz-80MHz

1.5. Common Mode Rejection: -30dB Minimum @1MHz-100MHz

1.6. Cross Talk: -30dB Minimum @1MHz-100MHz

## 2. Operating and Storage Temperature:

2.1. Operating Temperature:-40℃ to +85℃

2.1. Storage Temperature:-40℃ to +85℃

| | | | | | | | | |
|---|---|---|---|---|---|---|---|---|
| DIMENSIONS TOLERANCE METRIC .0=±0.30 .00=±0.20 .000=±0.10 ANG.=±2° | 單位(UNITS) | MM | 處理(FINISH) | SEE NOTE | 審校(CH'K) | Calvin | 圖名(NAME) RJ45 1x1 With 10/100 Base-T Tab Down W/EMI L:21.35 3.05mm | WISCONN Technology Co.,Ltd Tel:02-2790-1979 Fax:02-2790-1569 |
| | 數量(QT'Y) | N/A | 繪圖(DRAW) | Johnson | 核准(APP'D) | Selena | 料號(PART NUMBER) WRJ-1104B1009-1 | |
| | 材料(MT'L) | SEE NOTE | 設計(DE'N) | Mike | 日期(DATE) | DEC.04.2015 | 圖號(DRAW NUMBER) C006 | 比例(SCALE) 1/1 圖紙(SIZE) A4 頁次(SHEET) 1 版次(REV.) A |
| | | | | | | | 圖檔(FILE NAME .DWG) | |