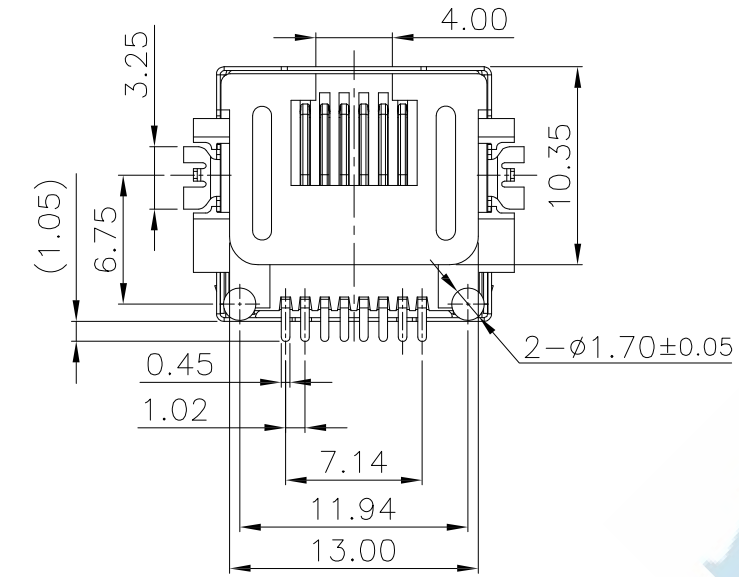

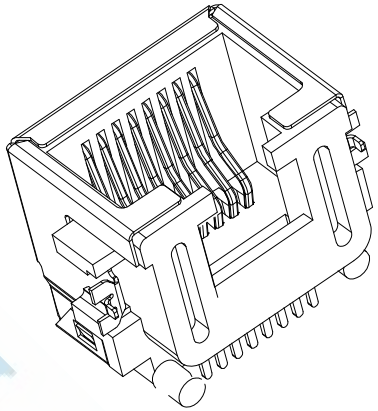

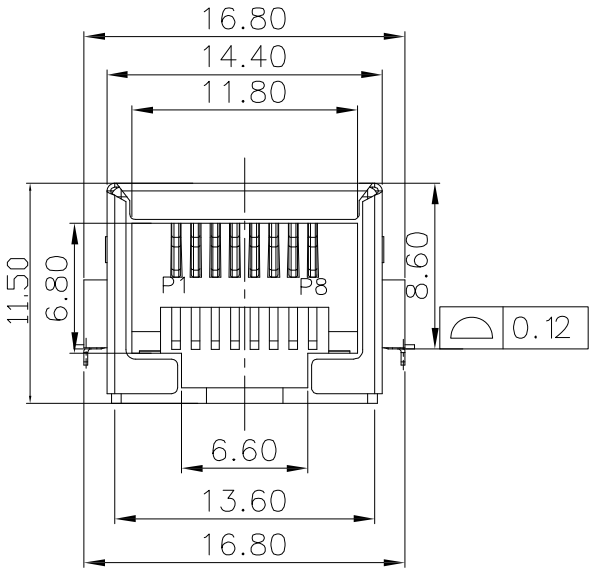

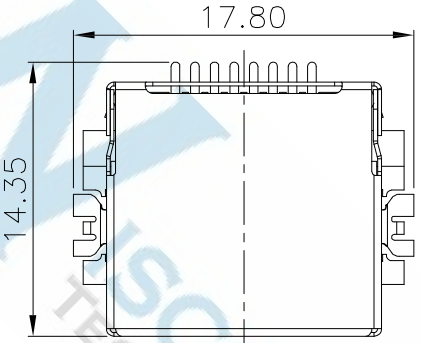

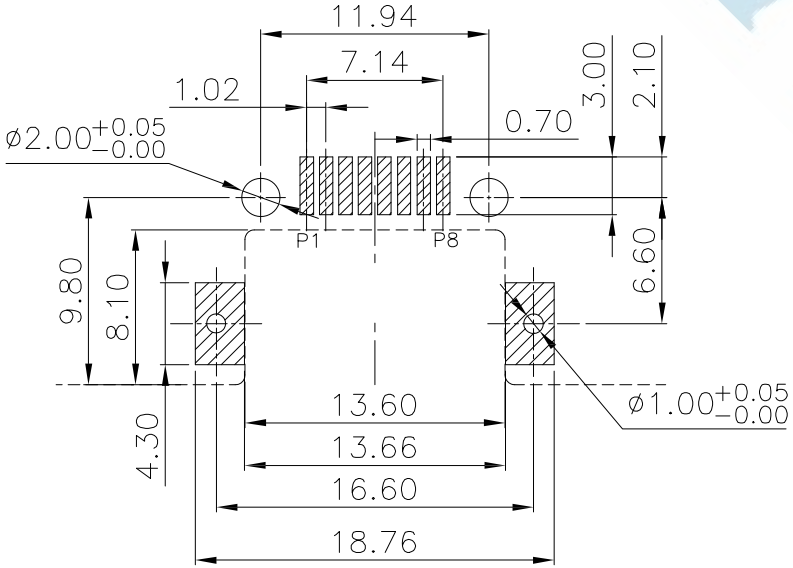

RECOMMENDED PCB LAYOUT

GENERAL TOLERANCE ±0.05

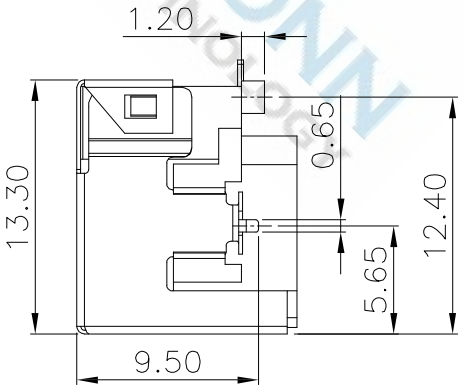

NOTES:

ELECTRICAL:

1. VOLTAGE RATING :125 VAC RMS.
2. CURRENT RATING : 1.5 AMP.
3. CONTACT RESISTANCE : 30 MILLIOHMSMAX
4. INSULATION RESISTANCE : 500 MEGOHMS MIN @ 500 NDC.
5. DIELECTRIC STRENGTH : 1000 VAC RMS 50Hz or 60Hz, 1MIN.

MECHANICAL:

1. HOUSING & INSERT MATERIAL : LCP UL94V-0.
2. CONTACT MATERIAL : DIAMETER0.45MM PHOSPHOR BRONZE GOLD PLATING OVER NICKEL.
3. SHIELD : 0.20~0.25MM THICKNESS BRASS WITH NI PLATED.
4. MATING/UNMATING FORCE : 2.2KG.F MAX.
5. RETENTION STRENGTH : 7.7KG.F MIN BETWEEN JACK AND PLUG.
6. OPERATING LIFE : 600 CYCLES MIN.

ENVIRONMENTAL:

1. STORAGE : -10℃ ~+40℃ REATIVE HUMIDITY<70%
2. OPERATION : -40℃ ~+85℃

DIMENSIONS TOLERANCE METRIC .0=±0.30 .00=±0.20 .000=±0.10 ANG.=±2°	單位(UNITS)	MM	處理(FINISH)	SEE NOTE	審校(CH'K)	Calvin	圖名(NAME) RJ45 8P8C SMT 沉板式		WISCONN Technology Co.,Ltd Tel:02-2742-1798 Fax:02-2742-1898				
	數量(QT'Y)	N/A	繪圖(DRAW)	Johnson	核准(APP'D)	Selena	料號(PART NUMBER)	WRJ5-08FN4BSSR					
	材料(MT'L)	SEE NOTE	設計(DE'N)	Mike	日期(DATE)	DEC.03.2014	圖號(DRAW NUMBER)	C006	比例(SCALE) 1/1	圖紙(SIZE) A4	頁次(SHEET) 1	版次(REV.) A	
							圖檔(FILE NAME .DWG)						