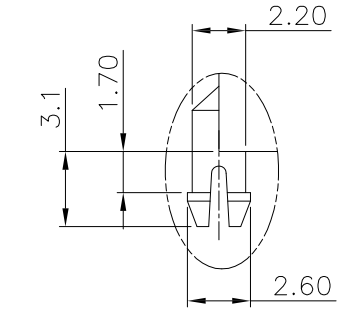

DETAIL B
(SCALE 2:1)

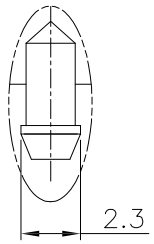

DETAIL C
(SCALE 2:1)

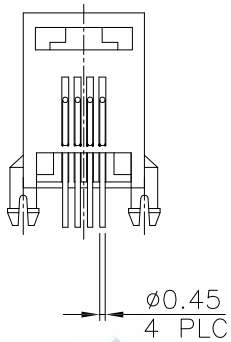

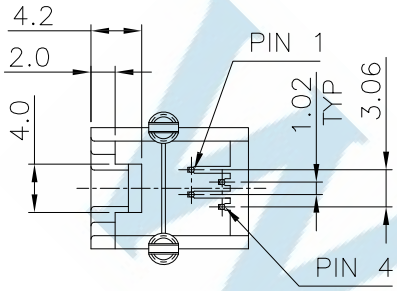

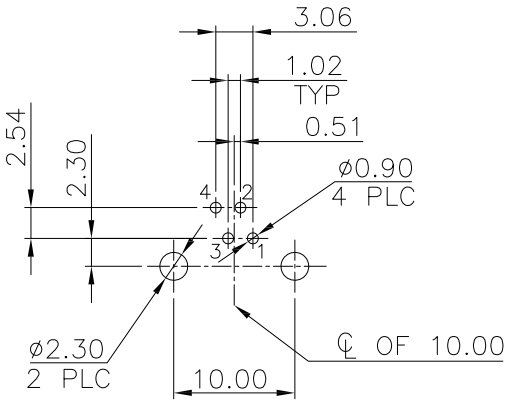

RECOMMENDED PCB LAYOUT

RECOMMENDED PCB THICKNESS: 1.6mm
TOLERANCE: ±0.05 (TOP VIEW)

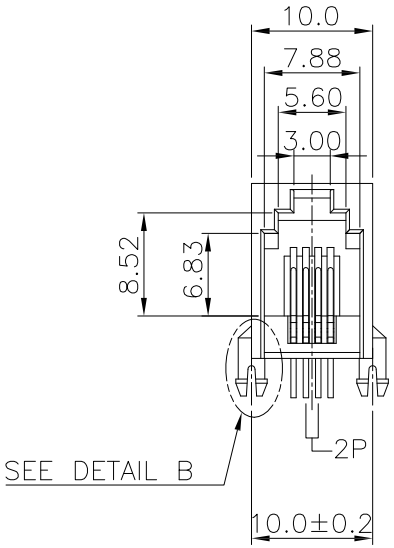

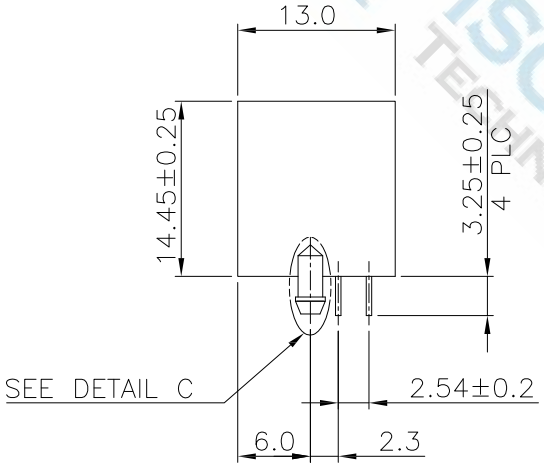

NOTE:

CAVITY CONFIRMS TO FCC RULES AND REGULATIONS PART 68, SUBPART F.

1. MATERIAL:
   HOUSING: PA46, WITH GLASS FIBER,
   UL 94V-0, COLOR-BLACK.
   CONTACTS: PHOSPHOR BRONZE.

2. FINISH:
   CONTACTS: GOLD FLASH PLATED ON ENTIRE CONTACT,
   1.27μm [50μ"] MIN. NICKEL UNDERPLATED
   ALL OVER.

DIMENSIONS TOLERANCE METRIC .0=±0.30 .00=±0.20 .000=±0.10 ANG.=±2°	單位(UNITS)	MM	處理(FINISH)	SEE NOTE	審校(CH'K)	Calvin	圖名(NAME) RJ9 4P4C 1x1 PORT WITHOUT SHIELDED L:13.0		WISCONN Technology Co.,Ltd					
	數量(QT'Y)	N/A	繪圖(DRAW)	Johnson	核准(APP'D)	Selena	料號(PART NUMBER)	WRJ9H-44-A-xxxRA1	Tel:02-2790-1979 Fax:02-2790-1569					
	材料(MT'L)	SEE NOTE	設計(DE'N)	Mike	日期(DATE)	AUG.20.2015	圖號(DRAW NUMBER)	T019	比例(SCALE) 1/1	圖紙(SIZE) A4	頁次(SHEET) 1	版次(REV.) A		
							圖檔(FILE NAME .DWG)							