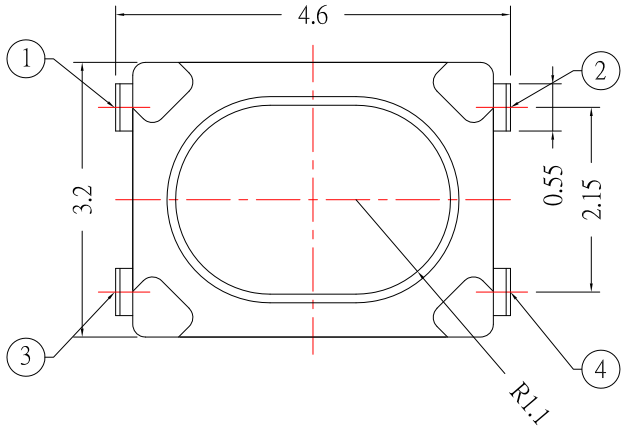

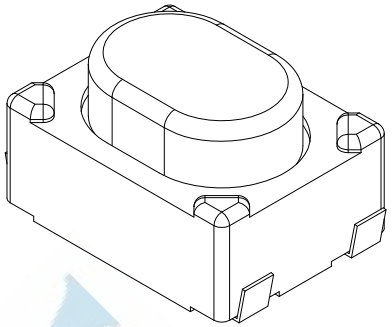

SPECIFICATIONS

Rating	DC 16V 50mA Max.					
Contact Resistance	500mΩ Max.					
Travel	0.2 ± 0.1mm					
Operating Force	1	130 ± 30gf	2	160 ± 50gf	3	250 ± 50gf
Operating Life (cycle)	50,000 cycles (130 ±30gf,160 ±50gf)					
	100,000 cycles (250±50gf)					

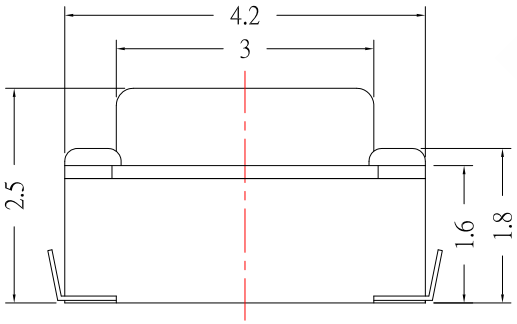

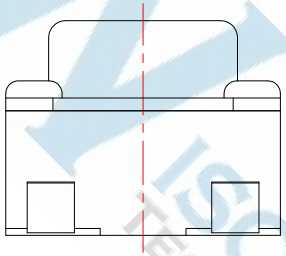

SMD REFLOW PATTERN

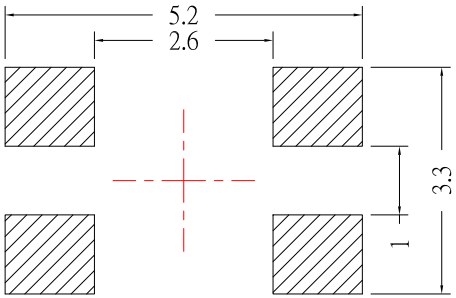

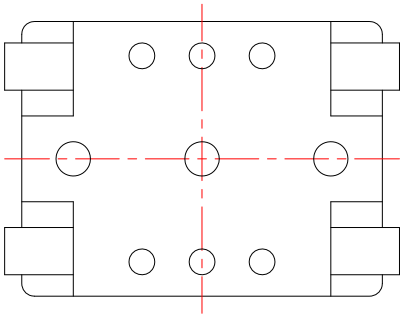

CIRCUIT DIAGRAM

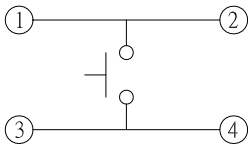

WISCONN TECHNOLOGY

DIMENSIONS TOLERANCE METRIC .0=±0.30 .00=±0.20 .000=±0.10 ANG.=±2°	單位(UNITS)	MM	處理(FINISH)	SEE NOTE	審校(CH'K)	Calvin	圖名(NAME) TACT SWITCH SERIES		WISCONN Technology Co.,Ltd				
	數量(QT'Y)	N/A	繪圖(DRAW)	Johnson	核准(APP'D)	Selena	料號(PART NUMBER)	WTS-04BSV-x	Tel:02-2742-1798- Fax:02-2742-1898				
	材料(MT'L)	SEE NOTE	設計(DE'N)	Mike	日期(DATE)	OCT.15.2007	圖號(DRAW NUMBER)	T002	比例 (SCALE) 1/1	圖紙 (SIZE) A4	頁次 (SHEET) 1	版次 (REV.) A	
							圖檔(FILE NAME .DWG)						