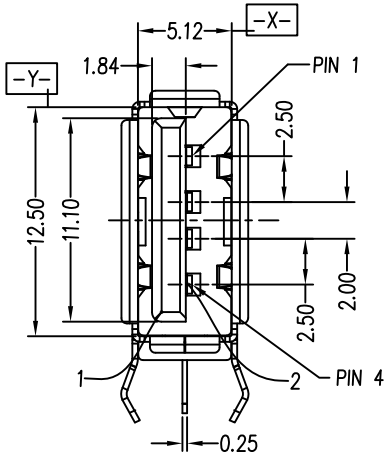

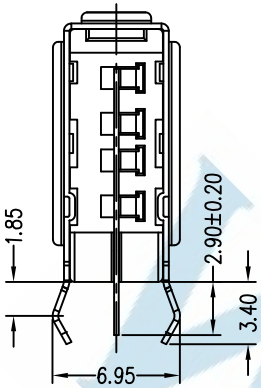

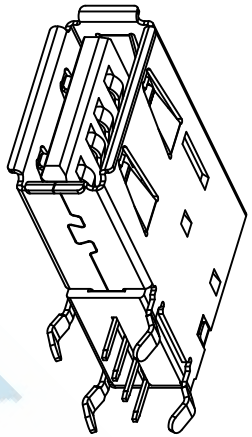

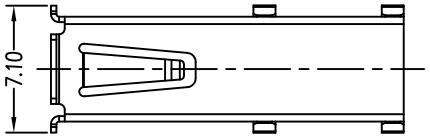

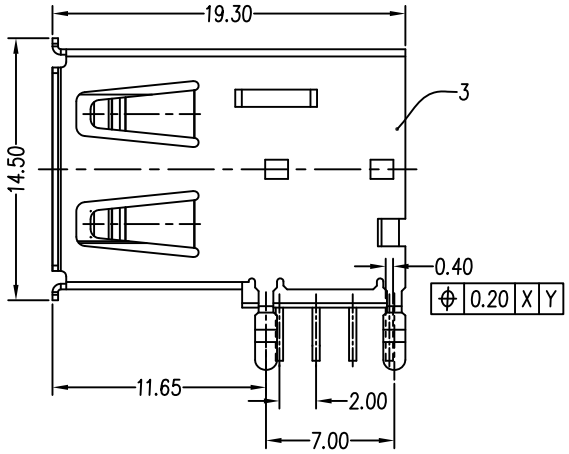

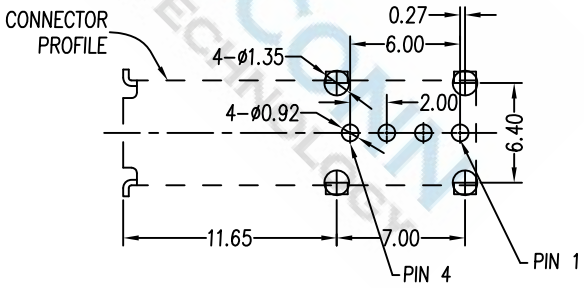

RECOMMANDED PCB LAYOUT

Note:

1. Material:
   - 1.1 Insulator: High temperature thermoplastic with g.f, UL94v-0
   - 1.2 Contact: Copper alloy, t=0.25mm
   - 1.3 Shell: Copper alloy, t=0.30mm
2. Specification:
   - 2.1 Current rating: 1 A Max.
   - 2.2 Voltage rating: 30V ac(rms)
   - 2.3 Dielectric withstanding voltage: 750 V(ac) for 1 min.
   - 2.4 Contact resistance: 30 mW Max.
   - 2.5 Insulation resistance: 1000 MW Min.
   - 2.6 Total mating force: 3.5 Kgf Max.
   - 2.7 Total unmating force: 1.0 Kgf Min.
   - 2.8 Temperature range: -55°C~85°C

DIMENSIONS TOLERANCE METRIC .0=±0.30 .00=±0.20 .000=±0.10 ANG.=±2°	單位(UNITS)	MM	處理(FINISH)	SEE NOTE	審校(CH'K)	Calvin	圖名(NAME) USB 2.0 側立式 A TYPE Female		WISCONN Technology Co.,Ltd Tel:02-2742-1798 Fax:02-2742-1898					
	數量(QT'Y)	N/A	繪圖(DRAW)	Johnson	核准(APP'D)	Selena	料號(PART NUMBER)	WU2AF-04FPWDUR-19.3						
	材料(MT'L)	SEE NOTE	設計(DE'N)	Mike	日期(DATE)	OCT.15.2007	圖號(DRAW NUMBER)	T002	比例(SCALE)	1/1	圖紙(SIZE)	A4	頁次(SHEET)	1	版次(REV.)	A
							圖檔(FILE NAME .DWG)							