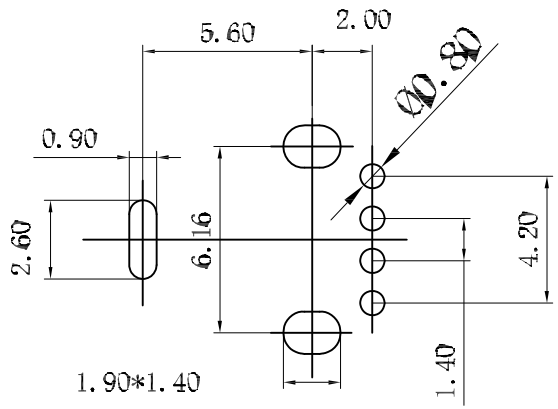

PCB LAYOUT
(BOTTOM VIEW)

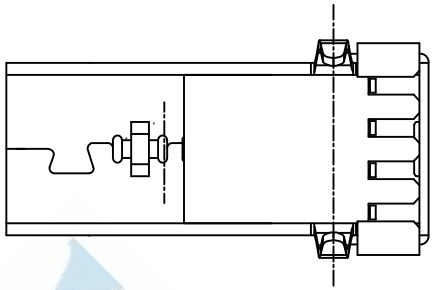

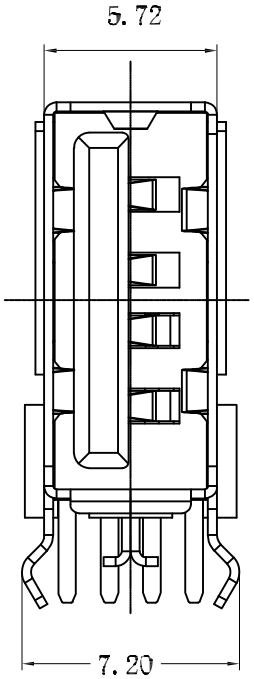

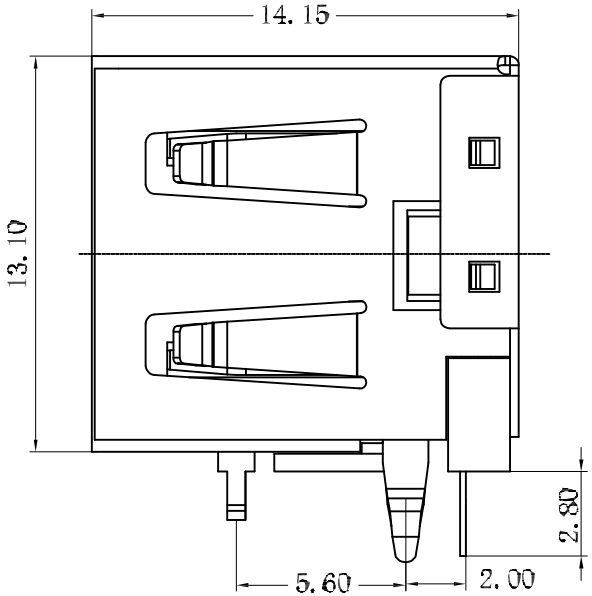

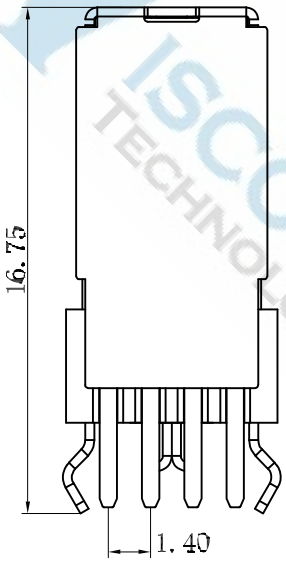

NOTE:

1. MATERIAL:
   a. HOUSING:PA9T GLASS FIBRE UL94 V-0 ;Black
   b. CONTACT:B cs
   c. SHEEL: SPCC
2. ELECTRIC:
   a. CONTACT RESISTANCE: 30 MILLIOHMS MAX
   b. INSULATION RESISTANCE: 1000 MEGA OHMS MIN
   c. DIELECTNIC VOLTAGE: 500V AC ONE SEC LEVEL
   d. OPERATING TEMPERATURE: -55° C~ 85° C
   e. Power plug, insert with the greatest 3.5KG, pull out the power of the minimum 1.0KG

DIMENSIONS TOLERANCE METRIC .0=±0.30 .00=±0.20 .000=±0.10 ANG.=±2°	單位(UNITS)	MM	處理(FINISH)	SEE NOTE	審校(CH'K)	Calvin	圖名(NAME) USB A/F 側插短體90度(平口)-14.15		WISCONN Technology Co.,Ltd Tel:02-2742-1798 Fax:02-2742-1898				
	數量	N/A	繪圖(DRAW)	Johnson	核准(APP'D)	Selena	料號(PART NUMBER)	WU2AF-04FPWDURF-14.15					
	一料(MT'L)	SEE NOTE	設計(DE'N)	Mike	日期(DATE)	OCT.15.2007	圖號(DRAW NUMBER)	T002	比例(SCALE) 1/1	圖紙(SIZE) A4	頁次(SHEET) 1	版次(REV.) A	
							圖檔(FILE NAME .DWG)						