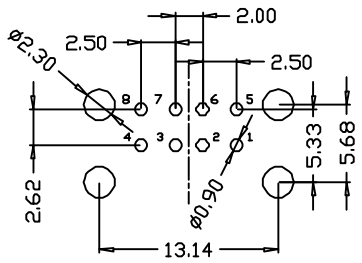

P.C.B. Layout (Top View)

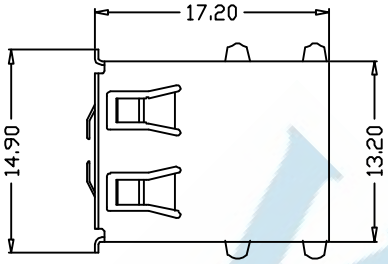

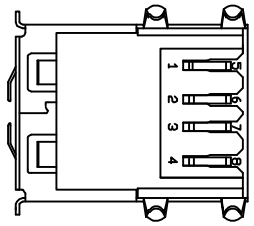

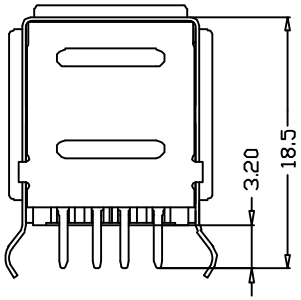

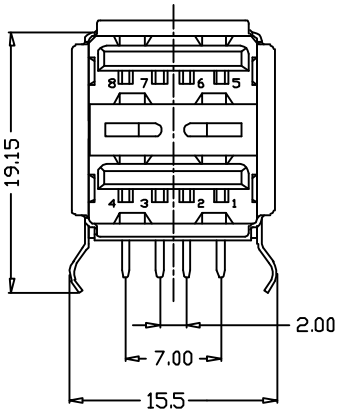

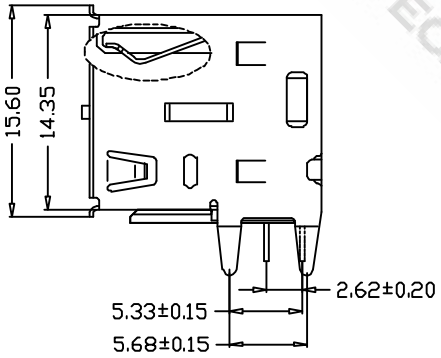

MATERIALS:
Contacts:Phosphor Bronze,
Insulator:PBT UL94V-0 Color=Black
Shell: Brass/Spcc,Nikel Plated.
Spring Pice:Spcc, Nickel Plated.
ELECTRICAL:
Contact current Rating:1 Amperes.
Dielectric Withstanding Voltage:AC 750V at sea level.
Insulation resistance:1000Megohms Min.
Contact Resistance:30Miliohms Max.
Operating Temperature:-55°C to +85°C
MECHANICAL CHARACTERISTICS:
Mating Force:3.57Kg.Max.

DIMENSIONS TOLERANCE METRIC .0=±0.30 .00=±0.20 .000=±0.10 ANG.=±2°	單位(UNITS)	MM	處理(FINISH)	SEE NOTE	審校(CH'K)	Calvin	圖名(NAME) USB A TYPE Double Female DIP(R/A) (17.20x14.90),PBT BLACK, SPRIING PICE		WISCONN Technology Co.,Ltd					
	數量(QT'Y)	N/A	繪圖(DRAW)	Johnson	核准(APP'D)	Selena	料號(PART NUMBER)	WU2AF-2X1FPBDR	Tel:02-2742-1798 Fax:02-2742-1898					
	材料(MT'L)	SEE NOTE	設計(DE'N)	Mike	日期(DATE)	OCT.15.2007	圖號(DRAW NUMBER)	T012	比例 (SCALE)	1/1	圖紙 (SIZE)	A4	頁次 (SHEET)	1
							圖檔(FILE NAME .DWG)						版次 (REV.)	A