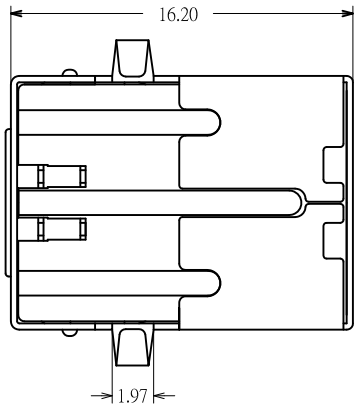

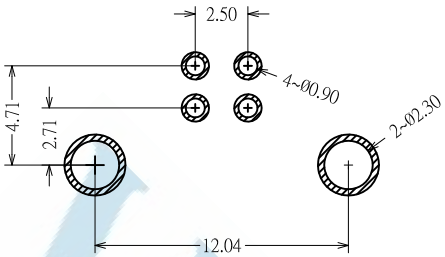

P.C.B.Layout

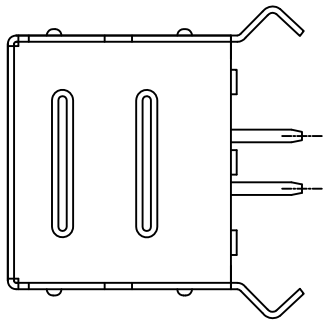

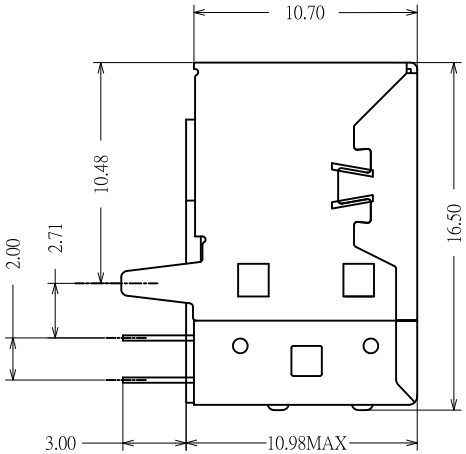

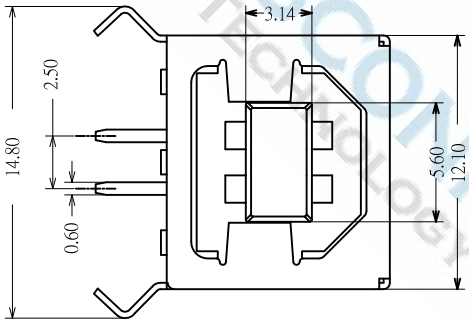

NOTE:

1.MATERIAL:

A.HOUSING:PBT UL94 V-0 ;WHITE

B.CONTACT:BRASS

(AU PLATING ON THE CONTACT AREA;
TIN PLATING ON THE SOLDER AREA;
NICKEL UNDERPLATING OVERALL;)

C.FRONT SHELL: SUS
(PLATING TIN)

D.AFTER SHELL: SUS
(PLATING TIN)

2.ELECTRIC:

A.CONTACT RESISTANCE: 30 MILLIOHMS MAX

B.INSULATION RESISTANCE: 1,000 MEGA OHMS MIN

C.DIELECTNIC VOLTAGE: 500V AC ONE SEC LEVEL

D.OPERATING TEMPERATURE: -55°C~ 85°C

E.POWER PLUG, INSERT WITH THE GREATEST 3.5KG,
PULL OUT THE POWER OF THE MINIMUM 1.0KG

DIMENSIONS TOLERANCE METRIC .0=±0.30 .00=±0.20 .000=±0.10 ANG.=±2°	單位(UNITS)	MM	處理(FINISH)	SEE NOTE	審校(CH'K)	Calvin	圖名(NAME) USB B TYPE R/A Female DIP		WISCONN Technology Co.,Ltd Tel:02-2742-1798 Fax:02-2742-1898					
	數量(QT'Y)	N/A	繪圖(DRAW)	Johnson	核准(APP'D)	Selena	料號(PART NUMBER)	WU2BF-04GFPWDR						
	材料(MT'L)	SEE NOTE	設計(DE'N)	Mike	日期(DATE)	OCT.15.2007	圖號(DRAW NUMBER)	T002	比例(SCALE)	1/1	圖紙(SIZE)	A4	頁次(SHEET)	1	版次(REV.)	A
							圖檔(FILE NAME .DWG)							