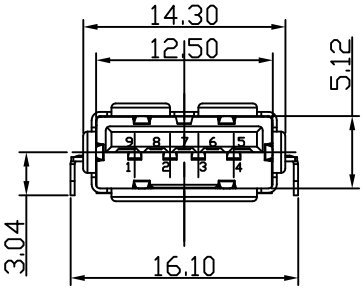

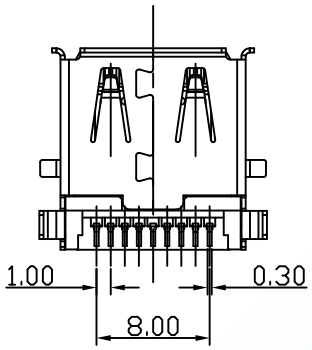

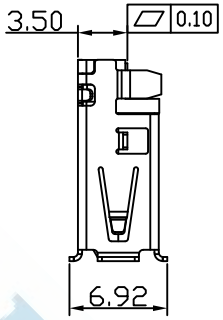

NOTE:

1. MATERIAL:
   1.1 INSULATOR:HIGH TEMPERATURE PLASTIC UL 94 V-0
   1.2 CONTACT:COPPER ALLOY(T=0.20mm)
   1.3 SHELL:BRASS(T=0.30mm)
2. ELECTRICAL CHARACTERISTICS;
   2.1 CONTACTRESISTANCE:30mΩ MAXIMUM
   2.2 CONTACT CURRENT RATING:1.5A
   2.3 DIELECTRIC WITHSTANDING VOLTAGE:500 V R.M.S.
   2.4 INSULATION RESISTANCE 1000 MEGOHMS MIN
   2.5 OPERATING TEMPEROTURE:-40° C ～ 85° C
3 MECHANICAL CHARACTERISTICS:
   3.1 MATING FORCE:3.57kg MAX
   3.2 UNMATED FORCE:1.02kg MIN
   3.3 DURABILITY:MANDATORY:5,000 CYCLES
4. PLATING
   4.1 TERMINAL CONTACT:30″ GOLD PLATING ALL OVER 50u″ MIN NICKEL AND 80u″MIN Tin ALL OVER 50u″ MIN NICKEL ON SOLDER AREA
   4.2 SHELL:80u″MIN.NICEL OVER 20″MIN COPPER

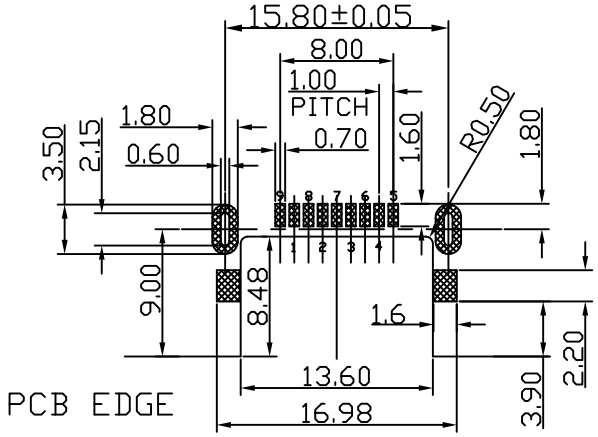

RECOMMANDED
PCBA LAYOUT

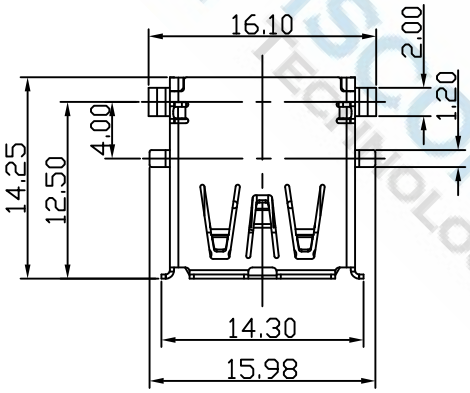

Pin #	SIGNAL NAME	DESCRIPTION	MATING SEQUENCE
1	VBUS	POWER	SECOND
2	D-	USB 2.0 DIFFERENTIAL PAIR	THIRD
3	D+		
4	GND	GROUND FOR POWER RETURN	SECOND
5	StdA_SSRX-	SUPERSPEED RECEIVER DIFFERENTIAL PAIR	LAST
6	StdA_SSRX+		
7	GND_DRAIN	GROUND FOR SIGNAL RETURN	
8	StdA_SSTX-	SUPERSPEED TRANSMITTER DIFFERENTIAL PAIR	
9	StdA_SSTX+		
Shell	Shield	CONNECTOR METAL SHELL	FRIST

DIMENSIONS TOLERANCE METRIC .0=±0.5 .00=±0.3 .000=±0.2 ANG.=±5°	單位(UNITS)	MM	處理(FINISH)	SEE NOTE	審校(CH'K)	Calvin	圖名(NAME) USB3.0 A/F 沉板式 SMT TYPE(SHELL DIP)		WISCONN Technology Co.,Ltd Tel:02-2742-1798 Fax:02-2742-1898				
	數量(QT'Y)	N/A	繪圖(DRAW)	Johnson	核准(APP'D)	Selena	料號(PART NUMBER)	WU3AF-09FPBSSR					
	材料(MT'L)	SEE NOTE	設計(DE'N)	Mike	日期(DATE)	OCT.15.2007	圖號(DRAW NUMBER)	T003	比例(SCALE)	1/1	圖紙(SIZE)	A4	頁次(SHEET) 1	版次(REV.) A
							圖檔(FILE NAME .DWG)						