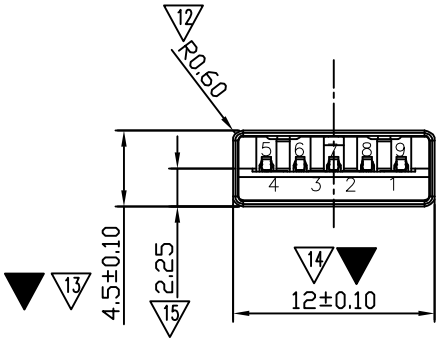

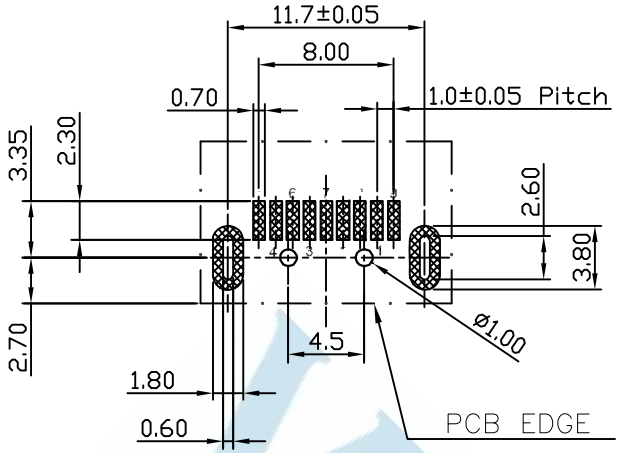

RECOMMENDED PCB LAYOUT

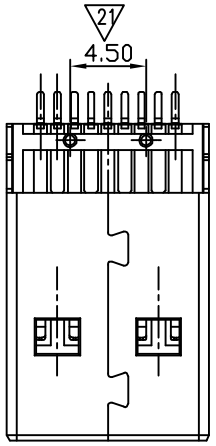

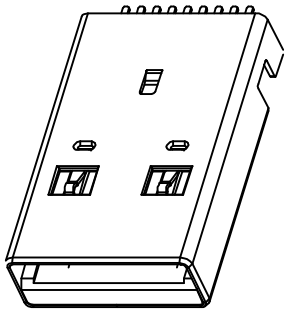

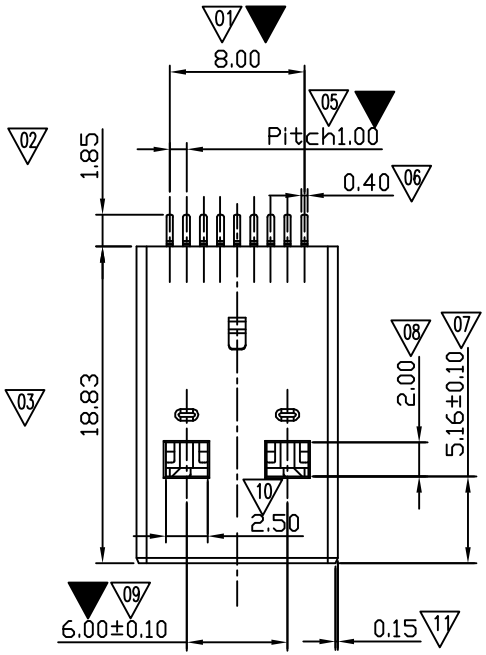

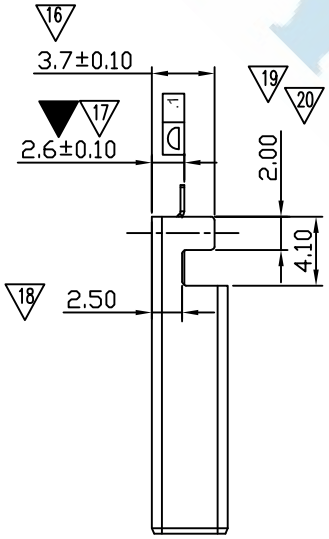

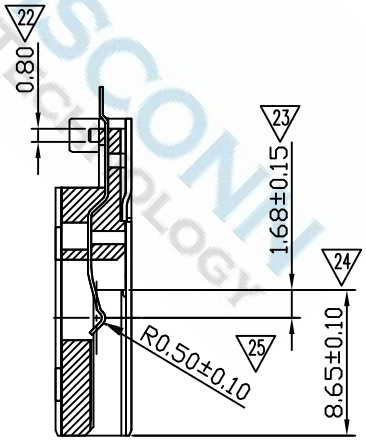

NOTES:

1. MATERIAL:
   - 1.1 HOUSING: LCP UL94V-0
   - 1.2 CONTACT: BRASS C2680-H(T=0.20mm)
   - 1.3 SHELL: SPCC(T=0.30mm)
2. ELECTRICAL CHARACTERISTICS:
   - 2.1 CONTACTRESISTANCE:30mΩ MAXIMUM
   - 2.2 CONTACT CURRENT RATING:1.5A
   - 2.3 DIELECTRIC WITHSTANDING VOLTAGE:500 V R.M.S.
   - 2.4 INSULATION RESISTANCE 1000 MEGOHMS MIN.
   - 2.5 OPERATING TEMPEROTURE:-40°C~85°C
3. MECHANICAL CHARACTERISTICS:
   - 3.1 MATING FORCE:3.57kg MAX.
   - 3.2 UNMATED FORCE:1.02kg MIN.
   - 3.3 DURABILITY:MANDATORY:5000 CYCLES
4. PLATING
   - 4.1 TERMINAL:GOLD FLASH ALL OVER 50U" MIN. NICKEL AND 1U"MIN. TIN ALL OVER 50U"MIN NICKEL ON SOLDER AREA.
   - 4.2 SHELL:150U"MIN NICKEL PLATING OVERALL.

DIMENSIONS TOLERANCE METRIC .0=±0.30 .00=±0.25 .000=±0.2 ANG.=±5°	單位(UNITS)	MM	處理(FINISH)	SEE NOTE	審校(CH'K)	Calvin	圖名(NAME) USB3.0 Male A TYPE PLUG SMT TYPE		WISCONN Technology Co.,Ltd Tel:02-2742-1798 Fax:02-2742-1898				
	數量(QT'Y)	N/A	繪圖(DRAW)	Johnson	核准(APP'D)	Selena	料號(PART NUMBER)	WU3AM-0915PBUPSR					
	材料(MT'L)	SEE NOTE	設計(DE'N)	Mike	日期(DATE)	OCT.15.2007	圖號(DRAW NUMBER)	T003	比例(SCALE) 1/1	圖紙(SIZE) A4	頁次(SHEET) 1	版次(REV.) A	
							圖檔(FILE NAME .DWG)						