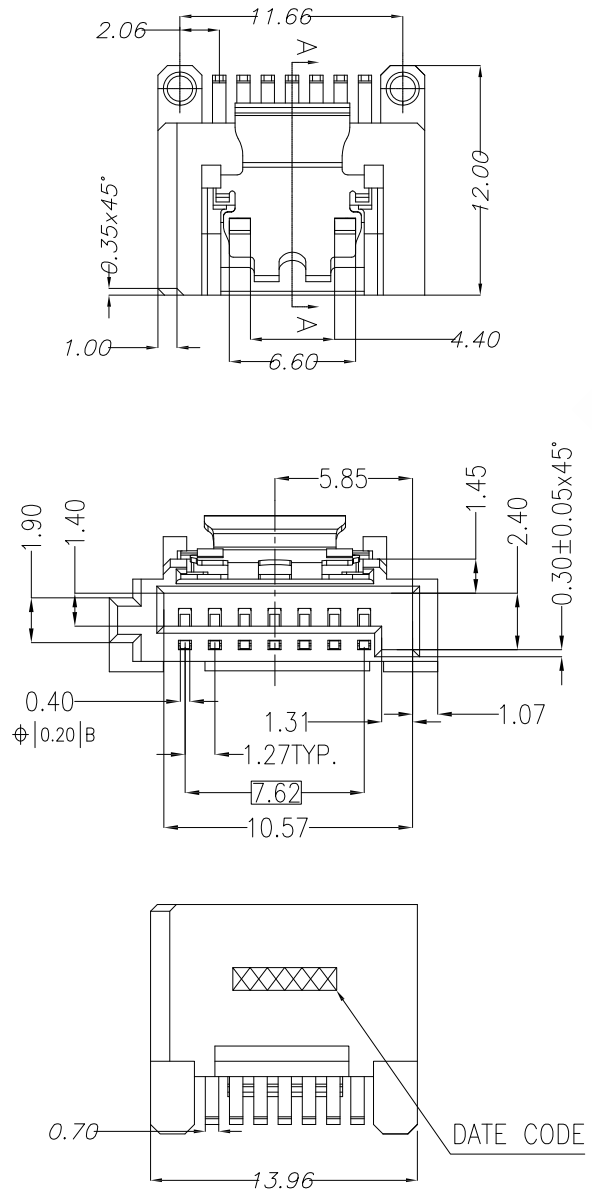

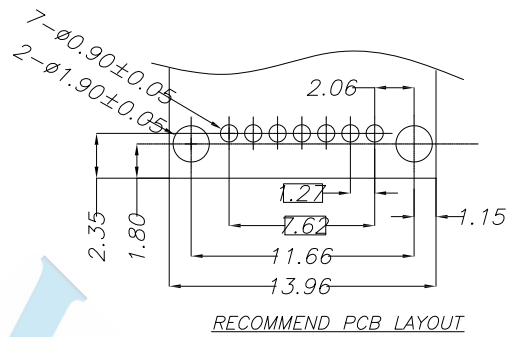

RECOMMEND PCB LAYOUT

CUSTOMER DRAWING

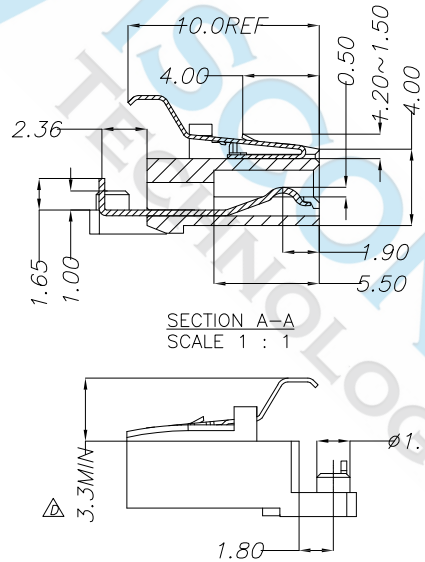

SECTION A-A
SCALE 1 : 1

NOTES:
1,MATERIAL:
BASE: HIGH TEMPERATURE THERMOPLASTIC,UL94V-0,
COLOR:BLACK
CONTACT: COPPER ALLOY T=0.30±0.01mm
SPRING: STRAINLESS STEEL T=0.20±0.01mm
2,PLATING:
CONTACT:SOLDERTAIL100u"MIN TIN OVER
50u" MIN NICKEL UNDERPLATE
GOLD SPECIFICATION:
a, F/G; b, 15U"; c, 30U''
3.ELECTRONICAL SPECIFICATION:
CURRENT RATING:1.5 AMPERE PER CONTACT
CONTACT RESISTANCE:30 MILLIOHMS MAX.
INSULATION RESISTANCE:1000 MEGOHMS MIN.
DIELECTRIC WITHSTANDING VOLTAGE:500 VAC.
OPERATING TEMPERATURE:-20°C~+85°C
4.THE PRODUCT SHOULD BE GP COMPLIANCE
5.DATE CODE:

WISCONN TECHNOLOGY

DIMENSIONS TOLERANCE METRIC								
Up to 5 ±0.2	UNITS	MM	FINISH	SEE NOTE	CH'K	Calvin	DRAW NAME	Asembley of SATA 7P Socket 180D for PCB
Above 05~15 ±0.3	QT'Y	N/A	DRAW	Johnson	APP'D	Selena	PART NUMBER	WSTAS-07xxLBDR
Above 15~30 ±0.4	MT'L	SEE NOTE	DE'N	Mike	DATE	October . 18 . 2022	DRAW NUMBER	T006
Above 30~50 ±0.5							FILE NAME .DWG	
Angle ±0.3°								

WISCONN Technology Co.,Ltd
Tel:+886-2-2790-1979 Fax:+886-2-2790-1569

SCALE	1/1	SIZE	A4	SHEET	1	REV.	A