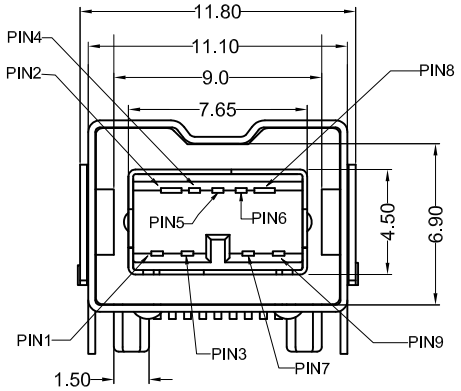

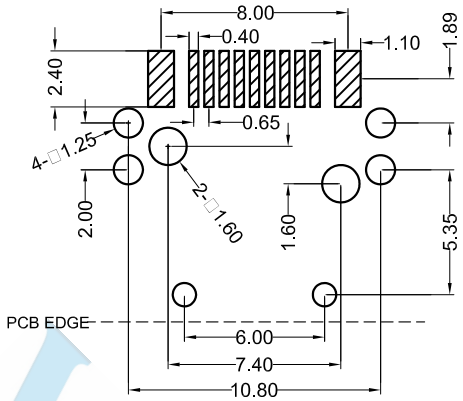

P.C.B LAYOUT MOUNTING PATTERN

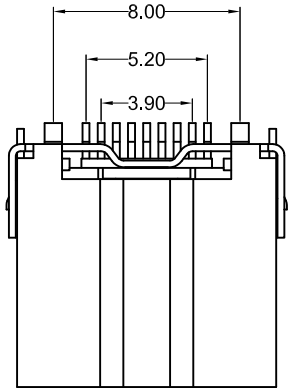

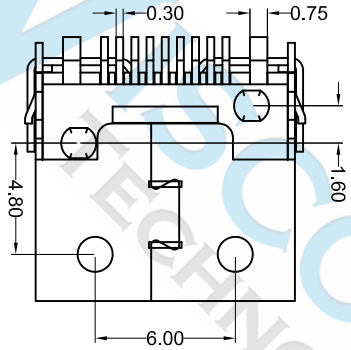

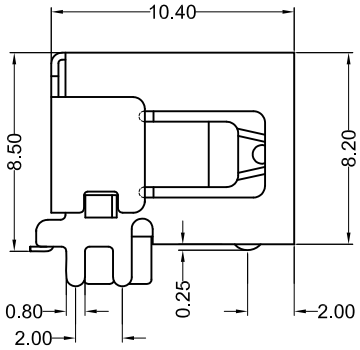

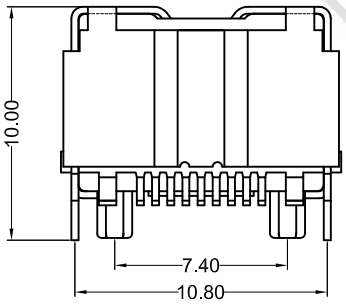

SPECIFICATIONS

Electrical:

1.Current Rating: 1.0A / contact terminal
2.Voltage Rating: 30V DC
3.Contact Resistance: 50 milliohms Max
4.Dielectric Withstanding Voltage:
300 V AC AT Sec Level
5.Insulation Resistance: 100 MEGA ohms Min

Mechanical:

1.Connector Mate and Unmate Force
Mate force: 3.0 kgf (Max)
Unmate force: 0.7 kgf (Min)
2.Terminal Retention: 0.5 kgf (Min)

Material:

1.Housing:
High Temperature Thermal Plastics,
UL 94V-0 , LCP , Black
2.Contact: PHOSPHOR BRONZE
3.Shell: BRASS

Finish:

1.Contact: Plated Gold in Mating Area;
Tin on Solder Balls
2.Shell: Nickel Plating

WISCONN TECHNOLOGY

DIMENSIONS TOLERANCE METRIC	UNITS	MM	FINISH	SEE NOTE	CH'K	Calvin	DRAW NAME IEEE 1394 9PIN SMT TYPE 90度(前凸點)		WISCONN Technology Co.,Ltd					
Up to 5 ±0.2 Above 5~15 ±0.3 Above 15~30 ±0.4 Above 30~50 ±0.5 Angle ±0.3°	QT'Y	N/A	DRAW	Johnson	APP'D	Selena	PART NUMBER	WI1394-09FLBSR-10.4F	Tel:+886-2-2790-1979 Fax:+886-2-2790-1569					
	MT'L	SEE NOTE	DE'N	Mike	DATE	August . 12 . 2020	DRAW NUMBER	T002	SCALE 1/1	SIZE A4	SHEET 1	REV. A		
							FILE NAME .DWG							