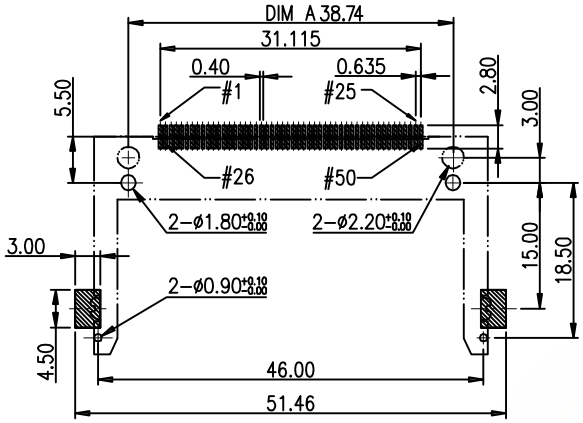

P.C.B Layout

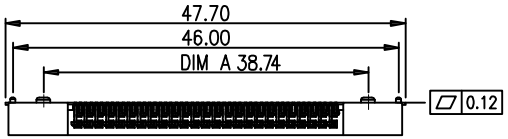

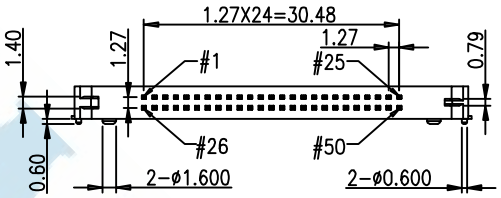

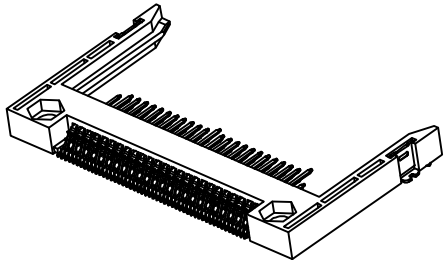

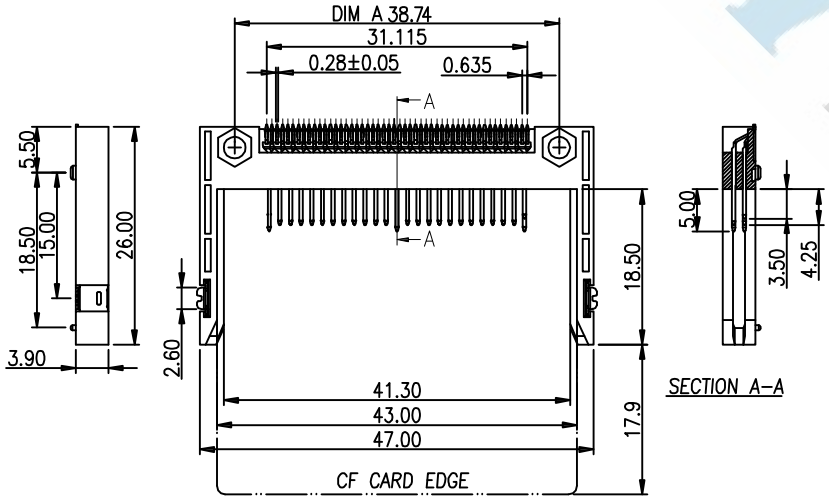

TABLE		
Pin Type	Interface Dim.	Pin No.
Detect	3.5mm (0.138In.)	25,26
General	4.25mm (0.167In.)	The others
Power	5.0mm (0.197In.)	01,13,38,50

MATERIALS

HOUSING: HI-TEMP PLASTIC (UL 94V-0)
TERMINAL: COPPER ALLOY, GOLD PLATED ON CONTACT AREA TIN PLATED ON SOLDER TAIL

SPECIFICATION

CURRENT RATING: 0.5 AMP MAX
DIELECTRIC WITHSTANDING: 500V AC FOR ONE MINUTE
INSULATION RESISTANCE: 1000M OHMS MIN AT DC 500V
OPERATION TEMPERATURE: -40°C~+85°C

DIMENSIONS TOLERANCE METRIC .0=±0.30 .00=±0.20 .000=±0.10 ANG.=±2°	單位(UNITS)	MM	處理(FINISH)	SEE NOTE	審校(CH'K)	Calvin	圖名(NAME) CF CARD TYPE I PCB MOUNT SMT MALE L=26.0mm		WISCONN Technology Co.,Ltd Tel:02-2742-1798 Fax:02-2742-1898				
	數量(QT'Y)	N/A	繪圖(DRAW)	Johnson	核准(APP'D)	Selena	料號(PART NUMBER)	WCFI-50GFHTSR-26.0					
	材料(MT'L)	SEE NOTE	設計(DE'N)	Mike	日期(DATE)	OCT.15.2007	圖號(DRAW NUMBER)	T004	比例(SCALE) 1/1	圖紙(SIZE) A4	頁次(SHEET) 1	版次(REV.) A	
							圖檔(FILE NAME .DWG)						