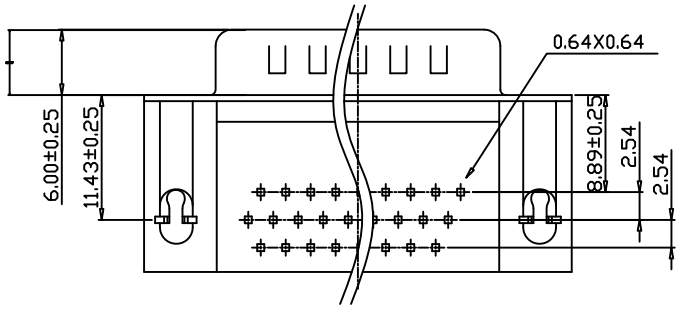

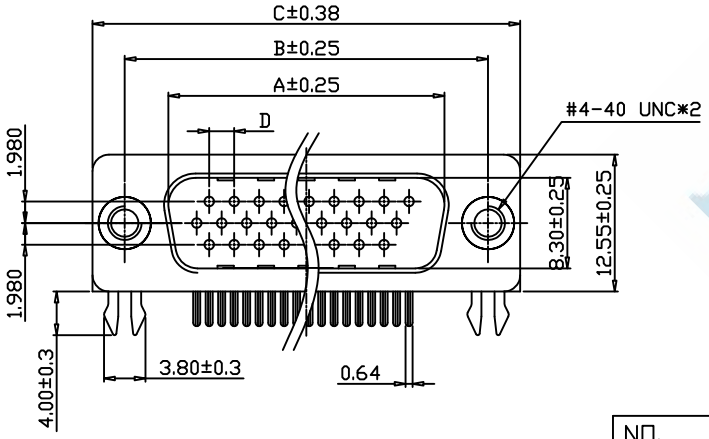

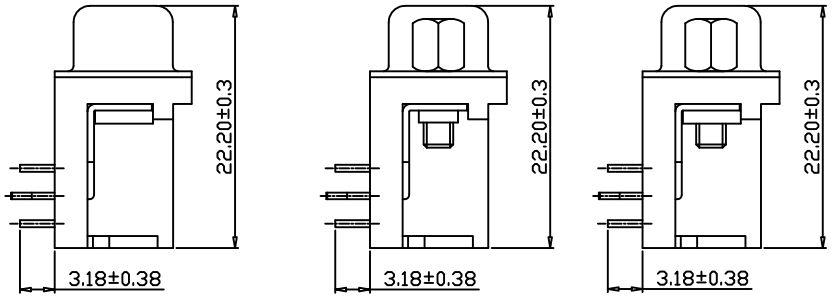

TYPE A TYPE B TYPE C

NO. OF CONTACTS	A	B	C	D
15	16.90	24.99	30.80	2.29
26	25.30	33.32	39.20	2.29
44	38.90	47.04	53.00	2.29
62	55.40	63.50	69.40	2.41

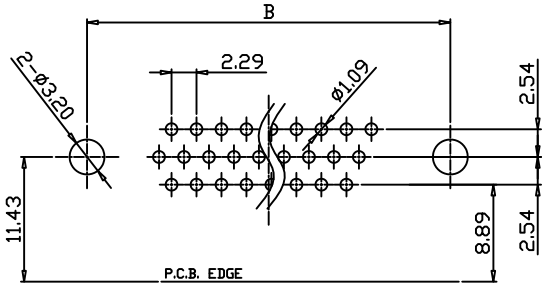

P.C.B. LAYOUT

MATERIALS:
1. Housing: PBT (UL 94V-0)
2. Contacts: Brass
3. Shell: SPCC
4. Rivet: Copper Alloy(Lead≦40000PPM)
5. Board Lock: SPCC
6. Screw: SPCC Or Copper Alloy(Lead≦40000PPM)

FINISH:
1. Contacts: Gold Flash Plated on Contact Area
   Sn Plated on Soldertails
   Nickel Under Plated Over All
2. Shell: Nickel Plated
3. Rivet: Nickel Plated
4. Board Lock: Sn Plated
5. Screw: Nickel Plated

DIMENSIONS TOLERANCE METRIC .0=±0.30 .00=±0.20 .000=±0.10 ANG.=±2°	單位(UNITS)	MM	處理(FINISH)	SEE NOTE	審校(CH'K)	Calvin	圖名(NAME) D-SUB Male(8.89)R/A G/F BLACK		WISCONN Technology Co.,Ltd Tel:02-2742-1798 Fax:02-2742-1898				
	數量(QT'Y)	N/A	繪圖(DRAW)	Johnson	核准(APP'D)	Selena	料號(PART NUMBER)	WDBM-xxFPBDR-8.89					
	材料(MT'L)	SEE NOTE	設計(DE'N)	Mike	日期(DATE)	OCT.15.2007	圖號(DRAW NUMBER)	T005	比例(SCALE)	1/1	圖紙(SIZE)	A4	頁次(SHEET) 1	版次(REV.) A
							圖檔(FILE NAME .DWG)						