PCB LAYOUT

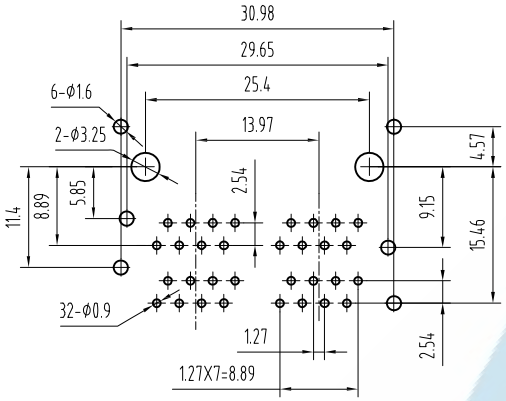

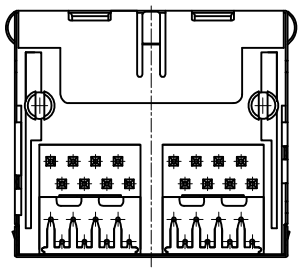

NOTES:

ELECTRICAL:

1.VOLTAGE RATING	:125 VAC RMS.
2.CURRENT RATING	:1.5 AMP.
3.CONTACT RESISTANCE	:30 MILLIOHMS MAX.
4.INSULATION RESISTANCE	:1000 MEGOHMS MIN @ 500V DC .
5.DIELECTRIC STRENGTH	:1000V AC RMS 50Hz. 1MIN.

MECHANICAL:

1.HOUSING MATERIAL	:LEAD FREE POLYESTER UL94V-0.
2.CONTACT MATERIAL	:PHOSPHOR BRONZE T=0.35mm FLAT PIN OR Ø0.46mm ROUND PIN.
3.PLATING	:GOLD PLATING OVER NICKEL.
4.OPERATING	:750 CYCLES MIN.
5.SHIELDING	:0.20mm THICKNESS COPPER ALLOY WITH NICKEL PLATED.
6.PCB RETENTION PRE-SOLDER	:1 LB MIN.

ENVIRONMENTAL:

1.Temperature Range : -40℃~+85℃

2.Relative Humidity : 90~95% (40±2℃)

MATES WITH MODULAR PLUG CONFORMING TO FCC PART 68, SUBPART F.

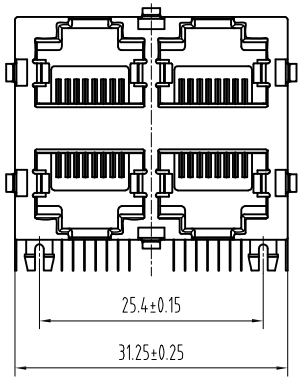

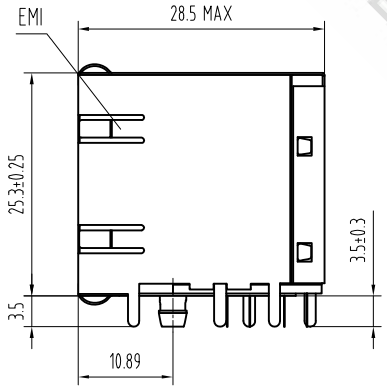

DIMENSIONS TOLERANCE METRIC .0=±0.30 .00=±0.20 .000=±0.10 ANG.=±2°	單位(UNITS)	MM	處理(FINISH)	SEE NOTE	審校(CH'K)	Calvin	圖名(NAME) RJ45 8P8C 2X2 PORT wo/LED		WISCONN Technology Co.,Ltd Tel:02-2742-1798 Fax:02-2742-1898					
	數量(QT'Y)	N/A	繪圖(DRAW)	Johnson	核准(APP'D)	Selena	料號(PART NUMBER)	WRJ588-2X206PBDR						
	材料(MT'L)	SEE NOTE	設計(DE'N)	Mike	日期(DATE)	OCT.15.2007	圖號(DRAW NUMBER)	C001	比例(SCALE)	1/1	圖紙(SIZE)	A4	頁次(SHEET)	1	版次(REV.)	A
							圖檔(FILE NAME .DWG)							