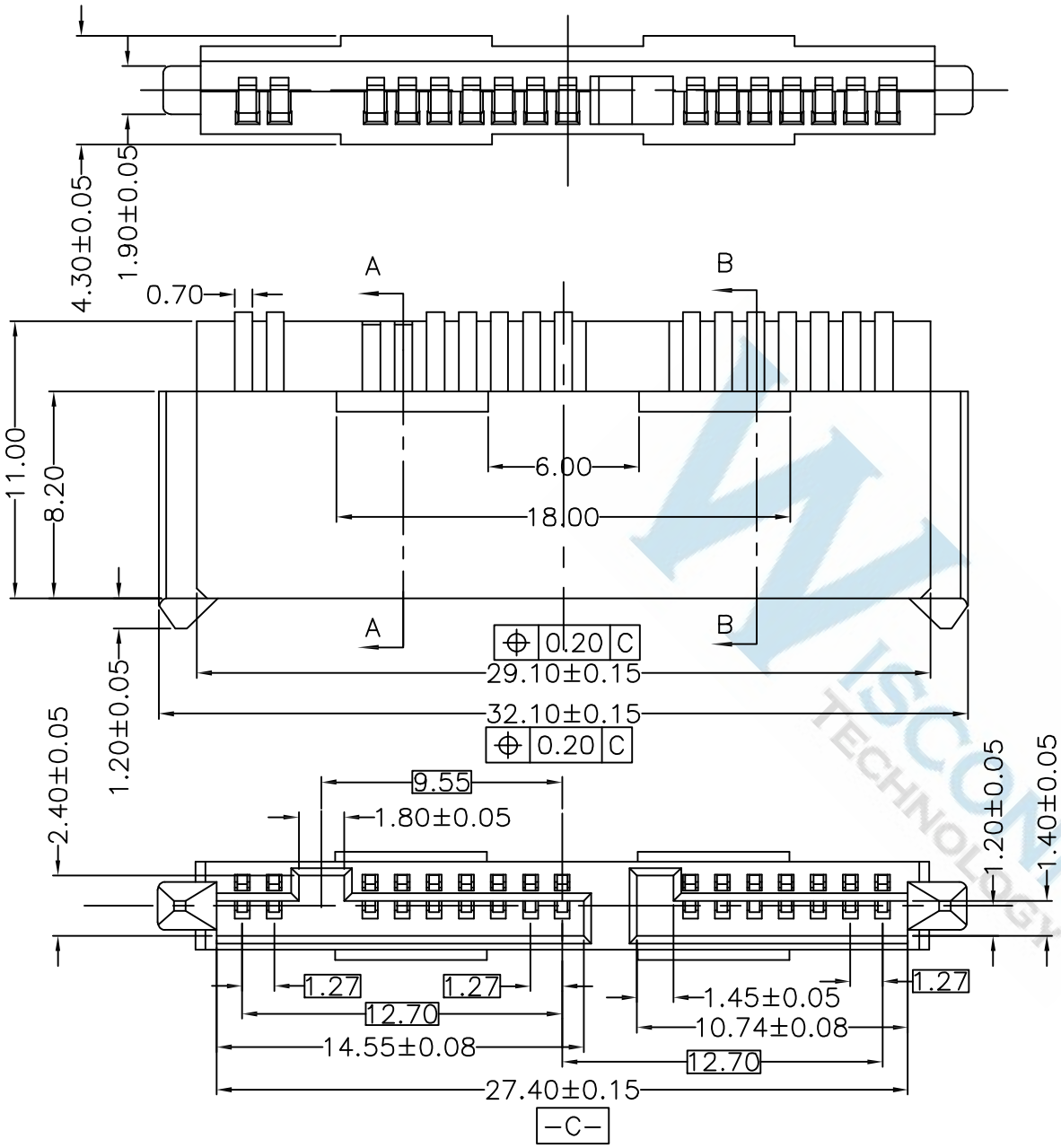

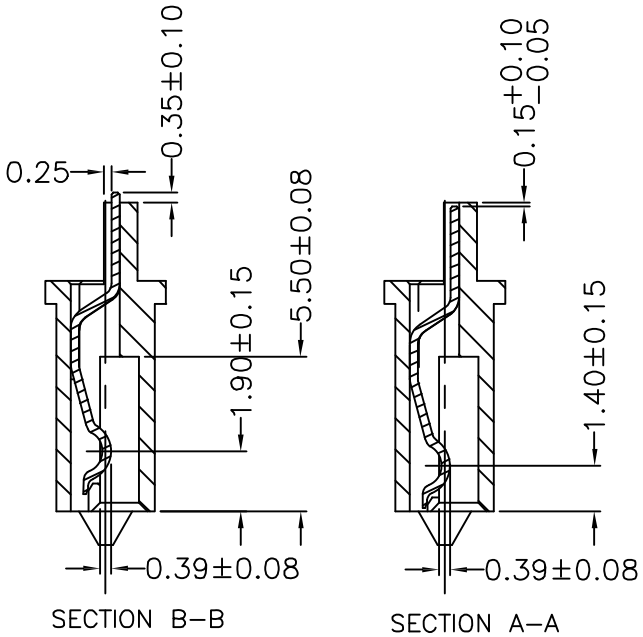

NOTE:

1.MATERIAL :
BASE:HIGH THERMOPLASTIC UL94V-0, COLOR : BLACK
TERMINAL: COPPER ALLOY, T= 0.30 mm

2,PLATING:
CONTACT:GOLD PLATED ON THE CONTACT.
TIN PLATED ON THE SOLDER TAIL.
NICKEL UNDERPLATED OVER ALL.

3.ELECTRONICAL SPECIFICATION:
CURRENT RATING: 1.5 AMPERE PER CONTACT
CONTACT RESISTANCE: 30 MILLIOHMS MAX.
INSULATION RESISTANCE: 1000 MEGOHMS MIN.
DIELECTRIC WITHSTANDING VOLTAGE: 500 VAC.
OPERATING TEMPERATURE: -40°C~+85°C

DIMENSIONS TOLERANCE METRIC .0=±0.30 .00=±0.20 .000=±0.10 ANG.=±2°	單位(UNITS)	MM	處理(FINISH)	SEE NOTE	審核(CH'K)	Calvin	品名(NAME) SATA 16P SOCKET SOLDER TYPE		WISCONN Technology Co.,Ltd Tel:02-2742-1798 Fax:02-2742-1898					
	數量(QT'Y)	N/A	繪圖(DRAW)	Johnson	核准(APP'D)	Selena	料號(PART NUMBER)	WSTA-16XXLBSR-SOLDER						
	材料(MT'L)	SEE NOTE	設計(DE'N)	Mike	日期(DATE)	OCT.15.2007	圖號(DRAW NUMBER)	T006	比例(SCALE)	1/1	圖紙(SIZE)	A4	頁次(SHEET)	1	版次(REV.)	A
							圖檔(FILE NAME .DWG)							